Chapter 1

INTRODUCTION

1.1 Rationale and Objective of the Study

The association between a low gravity anomaly and a granitic intrusion has long been recognized by exploration geophysicists (Wright, 1981). It is also generally accepted that the intrusion of granite into older rock formations is usually either accompanied or followed by mineralization. The gravity method has consequently been extensively used in the United States, Great Britain and other European countries in exploring for ore deposits genetically associated with granitic intrusion. In 1976 Australia became the first continent for which the gravity field has been determined completely on a regional scale (Smith, 1985). The potential of utilizing the gravity method as an exploration tool for deposits associated with granitic intrusion in this country, however, has not been fully assessed.

The New England tin belt in New South Wales offers an attractive geologic setting for such an assessment study. The intrusion of the Mole Granite into the older formations is considered to be responsible for the preponderance of mineral deposits surrounding it. Geologists, e.g. Wood (1980) and Plimer (1983, pers. comm.), who have studied the area, agree that a subsurface rise of the Mole is associated with most, if not all, of the ore deposits in the area and is therefore a good criterion for exploration in that mining district. Some of these deposits are the tin deposits located in the township of Emmaville.

Stanley and Plimer (1983, pers. comm.) have proposed an integrated geological and geophysical survey in the New England tin belt with the overall objectives of establishing a credible model for ore formation associated with the Mole Granite and later on using the compiled information as extrapolation criteria in prospecting and exploring for yet undiscovered deposits in that mining district. The research undertaken for this thesis is part of that integrated survey. The objective of this study is to assess the appropriateness and effectiveness of the gravity method in finding the location of, determining the depth to and defining the features of a buried granite cupola or rise overlain by metamorphosed sediments and volcanics in the New England tin belt using the Emmaville tin deposits as case-study areas.

1.2 Previous Geophysical Surveys in the Study Area

The area chosen for this study has been the focus of geophysical surveys by mineral exploration companies, the most notable of which are Shell Australia Limited and the Electrolytic Zinc Company of Australasia Proprietary Limited (EZ).

Shell has conducted gravity surveys over two traverse lines at a 50 m station interval as part of the company's assessment of the Loloma joint-venture offer. Only one of the two Bouguer anomaly profiles was considered to be sufficiently free of spurious effects to be interpretable. A small gravity low of the order of 20 g.u. in this profile was interpreted as reflecting a granitic rise at 500 m depth by Shell's geophysicists. Shell has also completed induced polarization (IP) surveying over the same traverse lines at 100 m spacing. Shell's geophysicists reported that the chargeability section shows an anomaly over the sulphide-cassiterite mineralized stockwork in the area. These surveys crossed the general strike of the faulted and tin-mineralized formation.

EZ has conducted more detailed IP surveys using a dipole-dipole array with n values ranging from 1 to 6 and electrode spacing of 25 m and 50m over the same traverse lines used by Shell. The results show high chargeabilities in the area. The apparent resistivities were also measured with the same electrode configuration used for the IP surveys. The results show a poorly defined region of low resistivities associated with the area where high chargeabilities were observed (Maniw, 1984).

1.3 Associated Gravity Surveys

As part of the previously mentioned integrated survey, students of the University of New England have undertaken gravity surveys over adjacent areas (Figure 1.1) where tin mineralization was considered significant. Chapman (1983) did his survey over three 2-km lines at 50 m station spacing at the Ottery Mine. The results he obtained have shown that the gravity method has practical limitations due to problems in applying terrain correction and the low-density contrast between granite and the host rock in the area. Chapman's modelling of the Bouguer anomaly profiles indicated that granite should outcrop or be close to the surface in areas where geological mapping showed no evidence of granite. Hutagaol (1986) concluded that the systematic rise in the gravity anomaly away from the outcropping Mole Granite is consistent with the granite top dipping at a shallow angle under the overlying sediments.

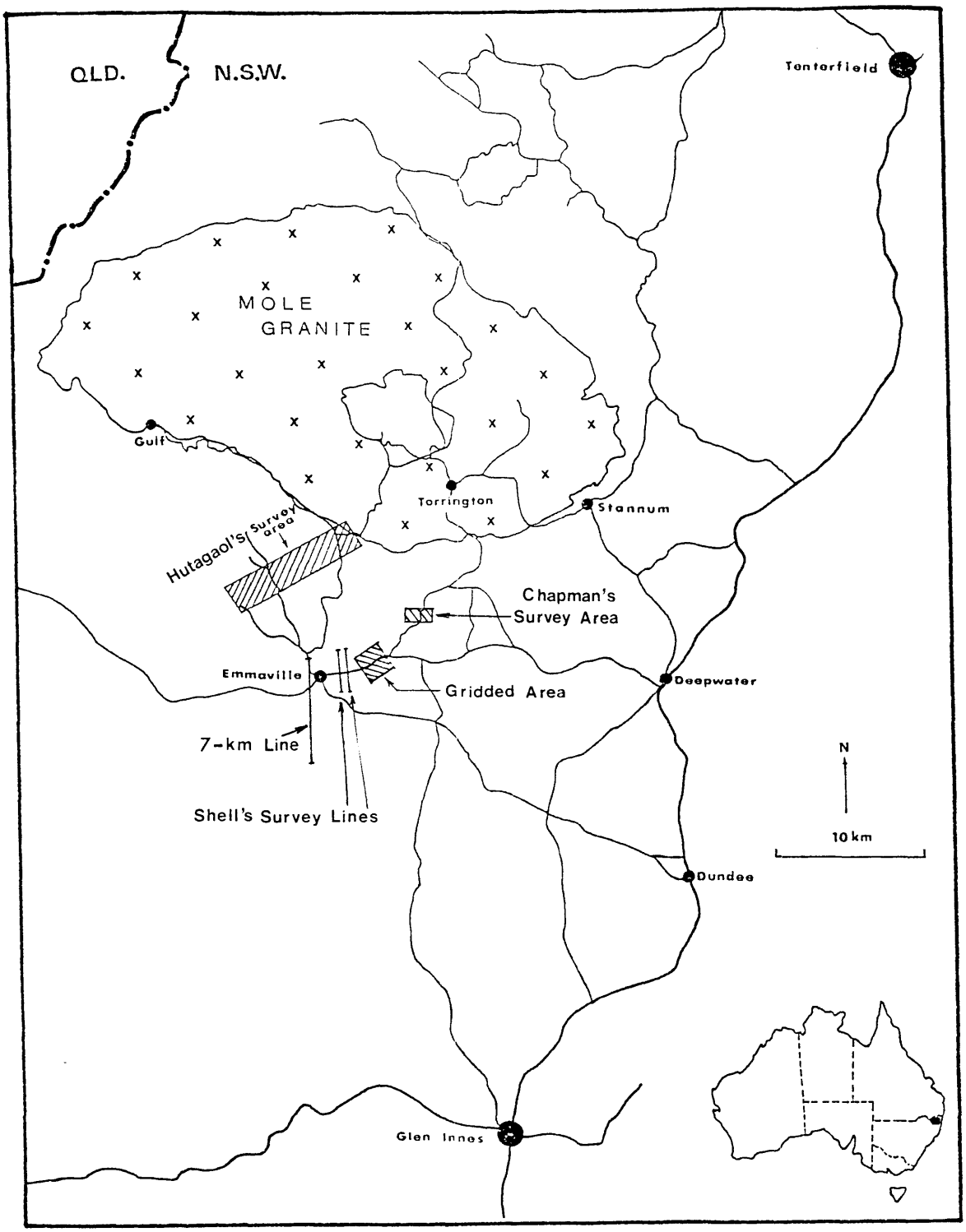

Figure 1.1 Location Map of the Gravity Surveys Conducted for this Study and of the Associated Gravity Surveys and Previous Geophysical Surveys

1.4 Gravity Surveys Conducted for This Study

Two gravity surveys were conducted to assess the potential of the gravity method as an exploration tool for deposits associated with granitic intrusions. The first was run over an area located east of Emmaville (Figure 1.1) where a 2 km x 2 km grid with a station spacing of 50 m was established. This area was chosen because it is known for the occurrence of tin mineralization. It is not clear whether the trend and the small-scale anomalies in the resulting Bouguer anomaly map are caused by subsurface mass distribution. Upward continuation of the Bouguer anomaly map was performed to 200 m level. The dominant feature in the upward-continuation map is a broad minimum of 20 g.u at the middle of the gridded area. This minimum can be attributed to either one of two possible explanations. One is based on lateral variations of rock formations as indicated by the surface geological map and the other is the existence of a granite rise or apex underneath the area. The broadness of the anomaly shown in the upward-continuation map indicates that a more widely spaced grid should extend well outside the 2 km x 2 km area that would allow gravity anomalies possibly related to a granitic cupola of the Mole Granite to be outlined more clearly than is possible with the 2 km x 2 km grid data set.

For the reason just stated and to assess the potential for such an extended grid survey, another gravity survey was run along a 7-km N-S traverse line (Figure 1.1). The interpretation of the acquired Bouguer anomaly profile in terms of a rising cupola was clearly limited by the fundamental ambiguity in gravity modelling.

Without further control provided by more reliable data such as drillhole logs, it is believed that the gravity method is ineffective and probably too expensive to use as a primary technique in prospecting for deposits associated with granitic cupolas. It may, however, prove to be useful in follow-up exploration surveys after the existence of a granitic cupola has been established by other methods which are not constrained by the ambiguity inherent in gravity data interpretation.

1.5 Units of Measurement and Abbreviations

The standard units adopted under the Système Internationale (SI) system of units and their accepted abbreviations were used consistently throughout the thesis except in the tables showing the results of density measurements and the density profiles where g/cc was used as the unit of density.

Chapter 2

GEOLOGY OF THE STUDY AREA

2.1 Regional Setting, Geology and Mineralization

The area chosen for study to achieve the objectives of this thesis is situated within the tin fields of the New England Tablelands and is approximately 11 km south of the Mole Granite. The Mole, as this granitic batholith outcrop is commonly called, is the biggest plutonic intrusive within the New England Batholith. The latter is one of the three suites of plutonic intrusives in the Woolomin-Texas Block, the other two being the Bundarra Plutonic Suite and the Hillgrove Plutonic Suite. The last two suites of rocks will not be discussed here.

2.1.1 The Woolomin-Texas Block

All the sediments in the Woolomin-Texas Block (Figure 2.1) are either Carboniferous or Early Permian in age except for a small group of Silurian-Devonian argillites, sandstones and slates along the eastern boundary of the block. The Carboniferous rocks consist of marine sediments, including the Sandon Beds in the south and Texas Beds in the north. The Sandon Beds consist chiefly of folded greywacke and claystone, the Texas Beds of sandstone and mudstone. In some places sediments similar to those of the Sandon and Texas Beds have been mapped as Permo-Carboniferous in age. The early Permian sediments are continental, and consist of numerous acid ash-fall and ash-flow tuffs, with local interbedded claystone. Some intrusive porphyries are present. Generally speaking, these rocks are also strongly folded. A large part of the Woolomin-Texas Block, particularly the area south of the New England Batholith, is covered by Tertiary flood basalt. This basalt has buried and preserved Tertiary drainage systems which contain major deep lead deposits (Weber, 1974).

The Woolomin-Texas Block is the most heavily mineralized structural unit in New South Wales. Most of its mineral deposits are situated within the area of granitoid masses in the New England Batholith suite of intrusives.

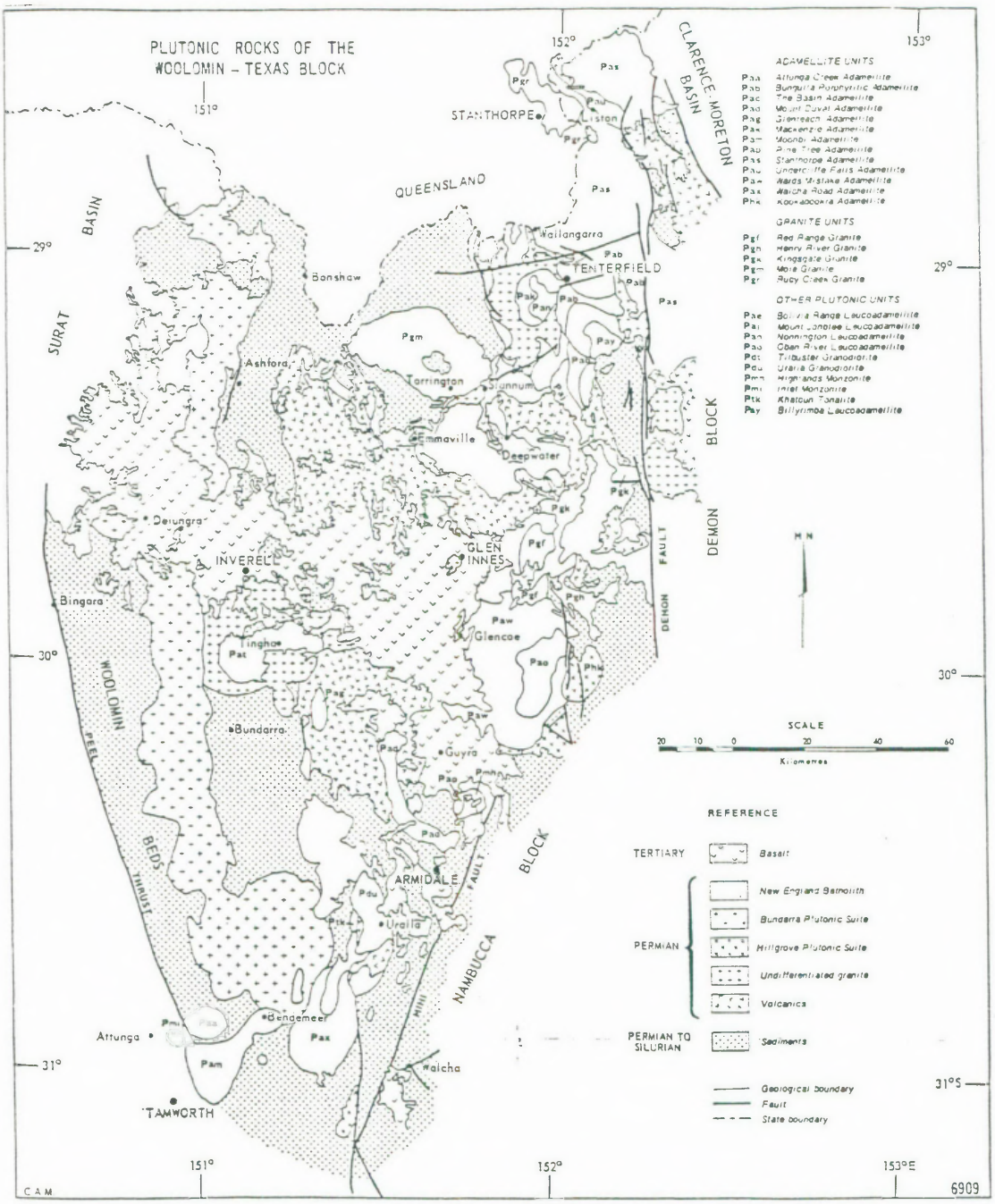

Figure 2.1 Plutonic Rocks of the Woolomin-Texas Block (After Weber, 1974)

2.1.1.1 Economic Mineral Deposits

Tin is the most important and abundant commodity being mined in the area. The extraction of this material has taken place almost continuously from 1871 to 1985. The slump of the market price for tin has, unfortunately, forced the mining companies to stop their mining operations in 1985. The other important commodities include tungsten (which occurs almost entirely as wolframite), molybdenum, bismuth, gold, arsenic, lead and silver. Among the commodities of minor importance are zinc, copper, fluorite, beryl (including emerald), kaolinite and monazite. Nickel, cobalt and uranium minerals, as well as feldspar, topaz, zircon, ilmenite and rutile also occur but are of mineralogical interest only.

Numerous placers contain sapphires. Most of the sapphires were reported by Curran (1897) to have been found in great abundance in the surface tin deposits south of Emmaville and between that town and the Severn River. Some sapphires were recovered from the Holocene alluvial deposits and Tertiary deep leads in the Vegetable Creek area but these were rarely of good quality being dark in colour and small in size (Weber, 1974).

Being characteristically epigenetic lode deposits, all known orebodies are small. Very few yielded more than 100,000 tons of ore and most of these bodies contained below 30,000 tons. However, this lack of size is balanced by the presence of local high-grade patches or sections which can be mined effectively. The placer deposits vary from a few hundred to several million cubic metres in size and are the source of the bulk of the tin and gold won from the entire Woolomin-Texas Block.

2.1.1.2 Type of Mineralization and Structural Control

Virtually all the mineralization consists of either epigenetic lode deposits related to the intrusive masses, or alluvial placers derived from the lodes.

Lodes occur localized within the actual granitoid masses, within silexite, pegmatites and aplites. They also occur outside the granitoids in intruded sediments, volcanics, and porphyries. They are characteristically hydrothermal in type, as evident from the wallrock alteration and the presence of late-stage minerals such as tourmaline, topaz and fluorite. Tin-greisen deposits are common.

The deposits are commonly in the form of veins controlled by steeply dipping faults, shears or joints. In several places ore grade mineralization occurs as steeply pitching pipes, shoots or "bungs", within a lode structure. In addition, true pipe deposits occur. These are invariably found within, but along the edge of, an intrusive granitoid. They differ from the first-mentioned pipes in that they are not localized within a lode structure (Weber, 1974).

Disseminated mineralization in any appreciable volume is the exception rather than the rule (Weber, 1974), although stockwork-like bodies have been worked by open-cut methods for tin, tungsten and gold, but for neither copper nor molybdenum.

The placer deposits include present-day river sands and gravels in addition to deep leads buried under alluvium and/or Tertiary flood basalt. Buried tin-bearing alluvial channels are up to several kilometres in length and are covered by up to 60 m of sediment and basalt.

2.1.2 The New England Batholith

This batholith consists of several disconnected plutonic granitoid masses, varying in age from Permian to Early Triassic and in composition from granodioritic to granitic. These masses are orogenic, non-foliated and vary from late to post-kinematic. The Mole Granite is the best-known of all these masses.

2.1.3 The Mole Granite

This batholith is elliptical in plan and covers an area of more than 800 km^2 (Weber, 1974). It outcrops over 650 km^2 and shows up prominently in satellite imagery as a tableland edged with a distinct metamorphic aureole and with dense bush cover (Kleeman, 1982). It rises to 450 m above the surrounding country and is covered by the Torrington Pendant, a metamorphosed sedimentary inlier or roof pendant of Permo-Carboniferous age, having the dimensions 6.5 km x 4 km. The invaded rocks surrounding the batholith are for the most part folded sediments similar to those of the Torrington Pendant. The southeastern section of the Mole is in contact with the Tent Hill Porphyrite and Emmaville Volcanics (Weber, 1974), both of which are described in more detail in Section 2.2.

The Mole Granite is of Late Permian age (Weber, 1974). Several authors have described the Mole with respect to composition and classification. Lawrence (1969) described it as varying "from coarse to medium grainsize and composed of orthoclase microperthite, quartz, lesser plagioclase and variable though minor amounts of biotite". Descriptions of other geologists vary, especially with regard to the classification as a granite. Lonergan (1971) considered that the unit is an adamellite if the scheme of Hatch, Wells and Wells (1961) is applied, but chose the scheme of Binns *et al.* (1967) and retained the name granite. Hesp and Rigby (1972) detected granodiorite samples from the Mole Granite. Flinter, Hesp and Rigby (1972) have determined differentiation, colour and petrological indices for three samples of the unit. In general, the Mole can be described as a coarse-grained biotite granite (Weber, 1974).

Studies have been conducted, more recently, by researchers of the University of New England. Kleeman (1982) made an "anatomical" study of this granite. He suggested that the granite margin dips outward at a shallow angle. He based his hypothesis on several lines of evidence which include the following: (1) the contact metamorphic aureole is too wide, suggestive of the granite dipping underneath, (2) mapping in areas of high relief implies outward dips of $7 - 15^0$, and (3) orebodies with a significant tin component cover a wide surrounding area. Kleeman classified the Mole Granite as an A-type granite, i.e., an anomalous, anhydrous, alkaline, anoragenic, aluminous granite.

Stegman (1983) has mapped and studied the mineral deposits associated with the southern central margin of the Mole. His area of study is situated a few kilometres north of Emmaville. Stegman's model of the evolution of the Mole Granite and its associated mineralization consists of eight important processes. In chronological sequence these are as follows.

1. The pre-granite structure of the Glen Creek beds influenced the formation of apices in the Mole Granite roof.

2. Crystallization of an outer porphyritic carapace prevented the loss of the metal-rich aqueous fluids from the granite and allowed these fluids to collect in the apices of the Mole Granite roof.

3. Retention of tungsten, bismuth and molybdenum in the granite magma and concentration of tin and base metals in the hydrous fluids culminated in two independent ore fluids.

4. Periodic rupturing of the carapace resulted in pulses of ore-fluids emanating from the granite apices.

5. Emplacement of the microgranite increased the temperature of the hydrothermal system.

6. Separation of W-Bi-Mo fluids from the crystallizing microgranite led to the introduction of these fluids into the roof zone of the Mole Granite.

7. Subsequent cooling of the Mole Granite caused the locus of mineralization to retreat into the granite.

8. Opening up of the granite allowed access of groundwater to the cooling granite and favoured dispersed mineralization and eventually led to the cessation of hydrothermal activity.

In spite of the unsettled arguments regarding its name and composition, the Mole may be called a "tin granite". Over 150 mineral deposits are situated within, around, and above the Mole Granite (Figure 2.2). These deposits provide much of the production in the Woolomin-Texas Block. During the 1880's they were responsible for a large proportion of the world's tin production. Other commodities, in descending order of importance, include wolframite, silver, arsenic, bismuth, base metals, fluorite, beryl and molybdenite. Some emerald has been won, and topaz is not uncommon, while uranium and nickel cobalt are present in places but are of mineralogical interest only (Weber, 1974).

2.1.3.1 Mineral Deposits Associated with the Mole Granite

Weber (1974) used a fourfold division of abovementioned deposits based on host rock. The divisions are (1) the Torrington Pendant, (2) the batholith proper, (3) the invaded rocks and (4) the younger placer deposits. Only the last two divisions will be discussed here because the deposits in and around Emmaville belong to these groups.

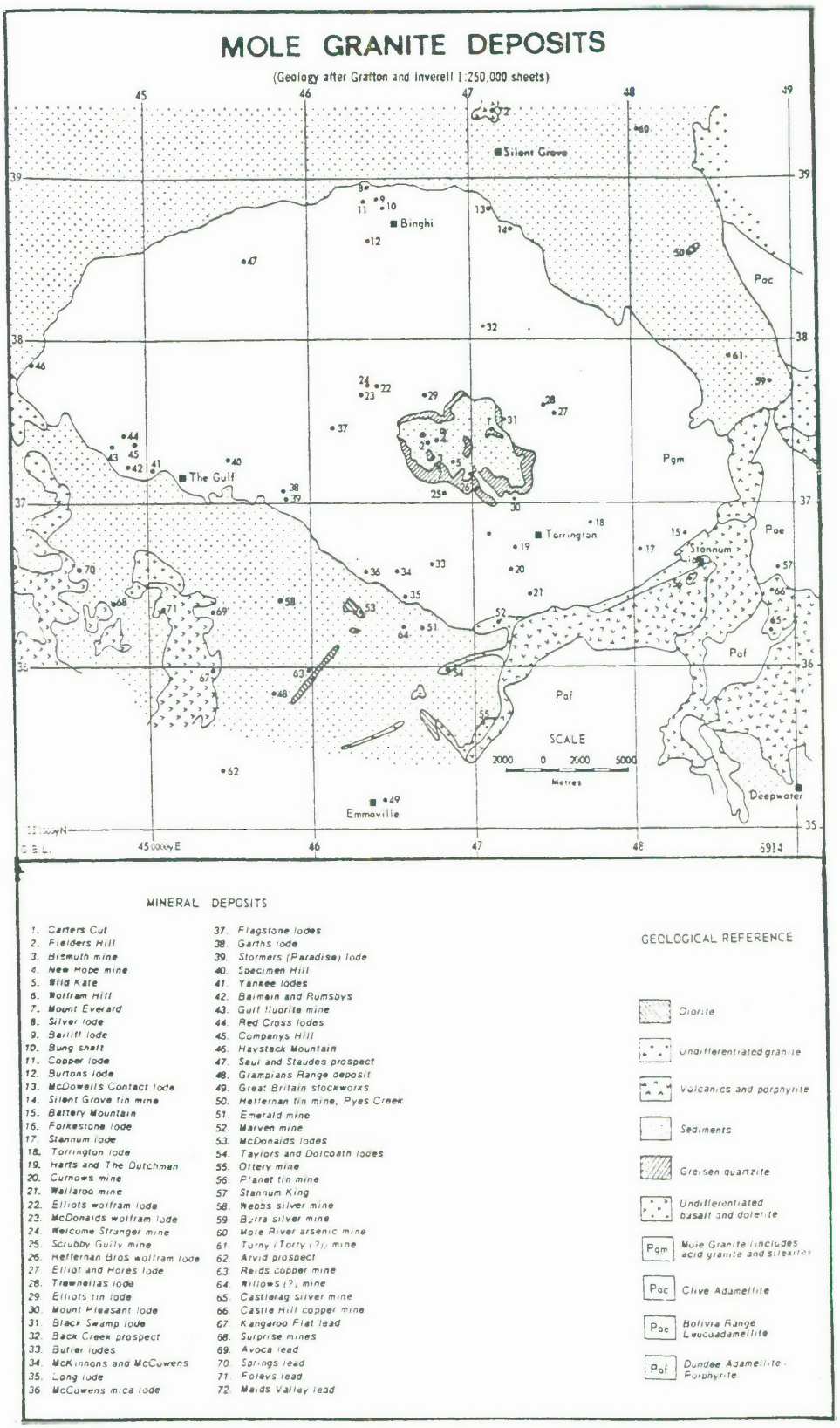

Figure 2.2 Deposits Associated with the Mole Granite (After Weber, 1974)

The Deposits in Rocks Surrounding the Mole Granite. These deposits mostly lie within a radius of 5 km from the batholith, but some are up to 9 km away (Figure 2.2). Some deposits are within other intrusive masses, but these masses are invariably considerably smaller than the Mole. Examples of these are the Culaden Granodiorite, Hell Hole Granodiorite, Ottery Adamellite-Porphyrite, Summit Granodiorite and Says Hill Porphyry, all of which are described in more detail in Section 2.2.2.4. All the deposits within and outside the granite contain cassiterite and/or other minerals which imply a hydrothermal "granitic" origin. In addition, they are related to each other by the presence of arsenopyrite, a constituent common to nearly all deposits (Weber, 1974).

The Emmaville Tin-Bearing Stockworks. Named by Wynn (1968) and Rasmus (1968) as such, this stockwork-like tin deposit occurs around Emmaville in the upper reaches of Vegetable Creek. It is situated on the site of the Great Britain Mine.

The deposit consists of numerous quartz-cassiterite veins up to 10 mm wide in a sequence of folded, partly altered, acid volcanics and sediments belonging to the Emmaville Volcanics. The veins strike within a few degrees of 50^0 (magnetic) and dip in the range of 70^0 northwesterly to vertical. Cross veins are very rare. The veins are joint- and/or cleavage-controlled and the strike is possibly parallel to that of the volcanic sequence. Veins are flanked on each side by a zone of alteration up to 20 mm thick. Very minor to rare amounts of arsenopyrite, wolframite, pyrite and chalcopyrite are present with the cassiterite. Perhaps the most significant feature of this deposit is that weathering, and to some extent alteration, has given rise to host rocks so soft that the tin they contain can be extracted using alluvial methods (sluicing). No blasting and only a little crushing is necessary (Weber, 1974).

Placer Deposits Associated with the Mole Granite. These have yielded vast quantities of tin. Three types of deposits can be recognized. The first type consists of tin-bearing alluvium ("wash") in present-day rivers and streams. Former drainage systems of Quaternary age, containing wash at the surface and/or buried under a few thin layers of barren alluvium, constitute the second type. The third type of deposit is found in drainage systems of Tertiary age that have been covered (and hence preserved) by Tertiary flood basalt flows. In some places, Ter-

tiary river channels were filled with basaltic lava; the river continued to flow over the basalt, depositing more alluvium, which was inundated by a second basalt flow. In this way, two or more levels of wash were formed in the Tertiary deep leads. The second type, the former drainage systems of Quaternary age, have been the most productive. They commonly incorporate a present-day stream that is characteristically in the form of a temporary watercourse meandering across and/or dissecting a larger, older file of fluvial sediments (Weber, 1974).

The Vegetable Creek Lead. This is the largest and richest deposit of the second type. It is situated in the valley of the present Vegetable Creek (Figure 2.3). It has been worked almost continuously since 1872. Two levels of wash were worked, a surface level up to 5 m thick and a level deposited during Pleistocene times up to 30 cm thick. They are separated by a layer of very hard breccia from 0.45 to 1.2 m thick. The lead generally varies from 40 to 300 m in width, but narrows to 15 m downstream where the creek becomes very rocky. Fourteen separate mines operated along the lead, the richest by far being the Great Britain near the upstream end. The alluvium contains fragments and cobbles of porphyry and sediment derived from Emmaville Volcanics which crop out in the upper reaches of the Creek. The source of the tin is probably solely stockwork-like veins. Grades varied considerably, and small pockets containing little else but cassiterite were found (Weber, 1974).

Two other major tin-bearing alluvial deposits in the area are those in the Graveyard Creek-Y Waterholes leads and those in the Boran Gully-Bourke's Hill Area (Figure 2.3). In the latter area much of the tin has been won, although smaller reserves undoubtedly remain in the upper reaches of the smaller stream flats. The Y waterholes area also appears to have been mainly worked out, as shown by auger drilling survey (conducted by Endeavour Resources Ltd) in which only three holes contained significant grades. The Graveyard Creek area has been extensively worked for shallow deposits, but the deep lead system may be still preserved over much of its length (Wood, 1980).

2.2 Detailed Geology

The Emmaville mining district has been the site of several geological investigations and mining evaluation works over the years due to the presence of significant tin deposits in the area, most notably, the Great Britain mine and the Vegetable Creek lead deposits, both of which have been discussed in the preceding text.

The district lies on the southern fringe of the zone of influence of the Mole Granite. Within this larger region a progression can be recognized from high-temperature pegmatitic mineralization close to or within the granite, through lower-temperature pneumatolytic mineralization at some distance, to low-temperature hydrothermal mineralization furthest from the granite (Wood, 1980).

Professor B. L. Wood of the University of New South Wales was commissioned jointly by Endeavour Resources Ltd. and Loloma Ltd. in 1980 to undertake a detailed geological mapping of the area with the following objectives: (1) preparation of an accurate geological map, (2) revision of mapping in the light of modern concepts, improved field exposures and workings and the large amount of information available at the time, (3) study of granitic and porphyritic boundaries and the relationship of mineralization to them, and (4) delineation of areas with economic potential.

Wood's subsequent study was based on a detailed revision of geological mapping in the district and a reinterpretation of the results of previous work. The following text on the detailed geology of the study area has thus been mostly based on his observations and conclusions.

2.2.1 Topography, Climate and Vegetation

The dominant topographic features in the area are the low ranges of hills of the Emmaville and Tent Hill Volcanic Formations. To the north an elevated erosion surface is cut across a monotonous sedimentary terrain, the Gulf Siltstone-Argillite Formation. To the south low rolling hills are underlain by the Dundee Rhyodacite Formation, and these merge at a great distance into tablelands characteristic of the New England Region.

Emmaville has quite unpredictable rainfall throughout the year.

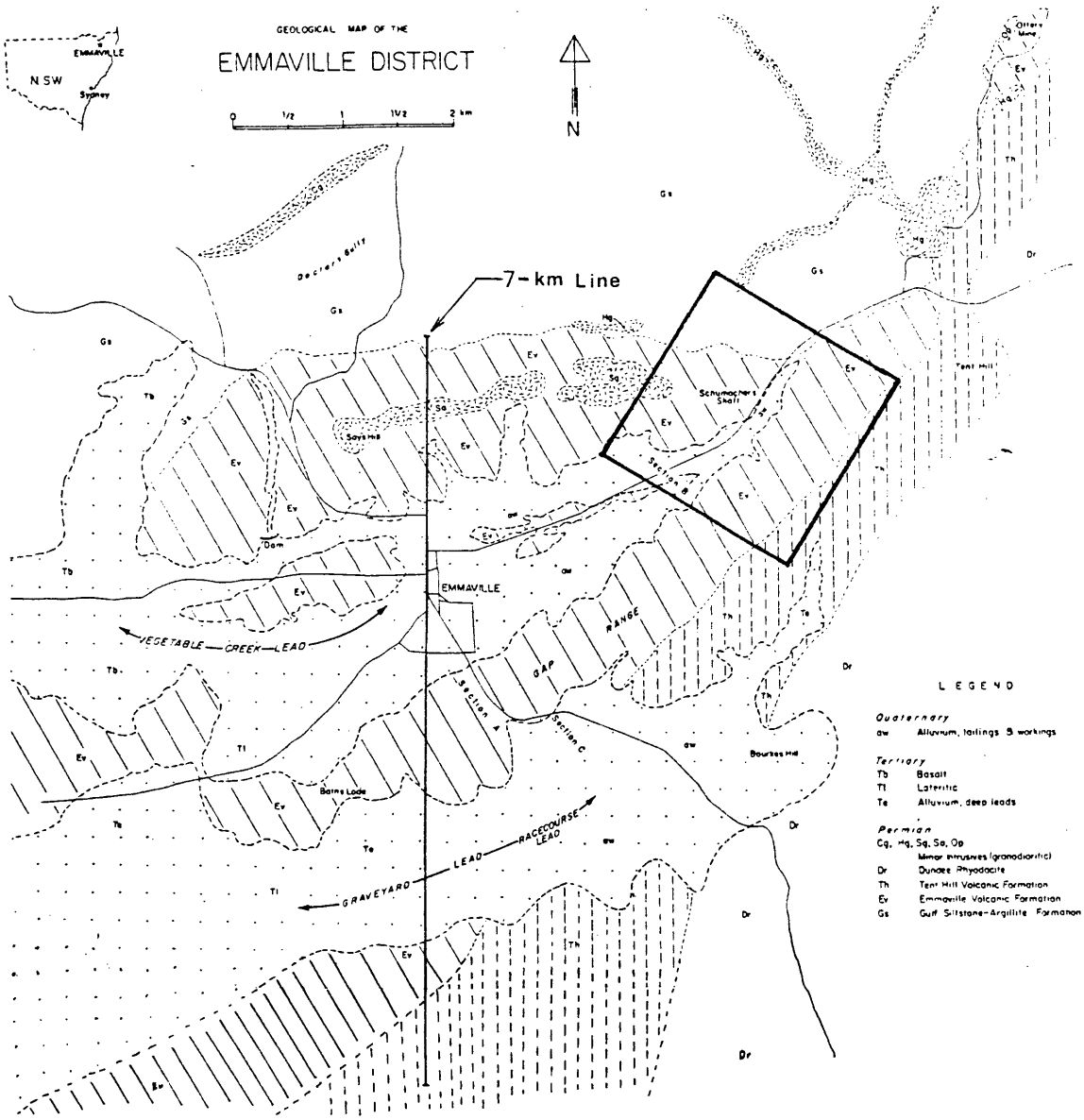

Figure 2.3 Geological Map of the Emmaville District (After Wood, 1980). The locations of and the formations transected by the survey grid and the 7-km traverse line are shown.

A large part of the area has been mined and exposed. The parts that are relatively untouched are covered by either grasses or eucalyptus trees. It has been observed that the latter grow in abundance over the Emmaville volcanics while the former mostly cover the Tent Hill volcanics.

2.2.2 Major Lithostratigraphic Formations

The major lithostratigraphic formations in the area, from oldest to youngest, are:

1. Gulf Siltstone-Argillite Formation;
2. Emmaville Volcanic Formation;
3. Tent Hill Volcanic Formation;
4. Dundee Rhyodacite, and
5. Minor Intrusive Rocks.

All of these formations have been traversed by either the grid survey or the 7-km line survey except the Dundee Rhyodacite which will not be discussed here.

2.2.2.1 The Gulf Siltstone-Argillite Formation

This unit outcrops in the area north of the township of Emmaville and good sections are exposed along the Gulf Road. The Grampians Road, northwest of the town, also provides sections similar to those on the Gulf Road. The area of outcrop covers at least 200 km^2 and a minimum thickness of 2 km (Wood, 1980) is inferred.

Petrological Descriptions. The unit consists mainly of dark grey to black interbedded siltstone and argillite, with rare beds of pebble-conglomerate, lithic crystal tuff, lithic sandstone and chert.

The rocks are, megascopically, mainly fine-grained, massive with a conchoidal fracture, dense, siliceous and commonly hornfelsic. Microscopically, they consist of finely recrystallized quartz, feldspar (mainly albite) and very fine biotite, confirmed

by X-ray diffraction analysis (Wood, 1980).In addition secondary muscovite, epidote and chlorite may be present. A diffuse microbrecciation texture is common, with anastomosing zones of chalcedonic or granular quartz separating darker angular or rounded areas; this appears to be a regional effect probably related to the widespread thermal metamorphism by the Mole Granite (Wood, 1980) which lies 11 km north of Emmaville.

Minor components of the Gulf formation include metadolerite, pebble beds and carbonaceous chert. The former is interbedded and folded with the siltstones, has also undergone mild contact metamorphism and consists of actinolite and phenocrystic plagioclase with a relict ophitic texture. It is considered to have been deposited with the sediments by contemporaneous marine volcanism.

Structures. Bedding is, at most outcrops, either not visible or poorly developed. Large scale bedding seems to have been extremely obscured or destroyed by a close irregular cleavage, such that some of the argillite has the appearance of so-called "broken formation". Wood (1980) has interpreted this as a possible indication of the occurrence of an extensive olistostromal or tectonic shearing and sliding. No coherent sequence could be recognised or measured, and the few steeply dipping beds found indicate that repetitive folds may also be present. Strike trends of the few pebble beds are northeasterly but most bedding strike trends northwesterly, with dip angles commonly more than 50^0.

The rocks were regionally folded before intrusion of the Mole Granite, and probably underwent very low grade regional metamorphism at the same time. Little evidence of this, however, remains as it has been overprinted by the thermal effects. These rocks are relatively low grade, are of the albite-epidote-hornfels facies, but closer to the granite are of the hornblende-hornfels facies. In the immediate vicinity of the several small satellite intrusions mapped by Wood (1980) (Culaden, Hell Hole and Summit granodiorites), local contact effects are also evident, in distinctly silicified aureoles with sericite and minor sulphides.

Mineralization. David (1887) found numerous thin veins of tinstone in this formation, more particularly in the northwest part of the area under study. Beyond the present area towards said direction lies the Grampians stockwork in siltstone. Alluvial workings at Doctor's Gully and in the creeks upstream indicate

sources in the adjacent bedrock, while near the source of Hell Hole creek, small pits and much of the specimen stone in a nearby dam wall, reveal sulphide-cassiterite veining. Widely distributed weakly mineralized veinlets were seen at several natural exposures of the Gulf Formation, and an area of pyritic silicification with veinlets lies 1.5 km northeast from the golf course. A particularly significant example is visible in a cutting on the Torrington road 350 m north from the junction at Tent Hill. Three black-banded veinlets in argillite extend without break across the contact of a stock of Hell Hole Granodiorite, into which they continue for an unknown distance (Wood, 1980). Similar occurrences are indicated elsewhere around the granodiorites by the way in which workings span the contacts.

Age. The age of this formation has been mainly determined by the study of fossils found in three localities in the area. At Doctor's Gully, fossils occur only in alluvium derived from the siltstone and include a gastropod and a crinoid stem; in both the original carbonate has been replaced by cassiterite (Lawrence, 1952). In a small stream southeast of the Emmaville golf course poorly preserved fossils occur in siltstone while in Vegetable Creek similar forms are preserved in conglomerate. The Doctor's Gully forms provide little indication of age, but the others can be correlated with the *Allandale fauna* (Prof. B. N. Runnegar, in his personal communication with Prof. Wood) which is of Lower Permian age (Evans and Roberts, 1980).

2.2.2.2 The Emmaville Volcanic Formation

This unit surrounds the township of Emmaville and extends throughout a large area to the south and west. It hosts most of the mineralization in the area.

Petrological Descriptions. The formation consists dominantly of products of rhyolitic eruptions, including agglomerates, talus explosion and carapace breccias, crystal, lithic and vitric tuffs, ignimbrite, cinders, pumiceous conglomerate and intermixed flowrocks (lava) of many textural varieties. The middle part of the sequence exposed along the valley of Vegetable Creek, consists of well bedded subaqueous volcanic sediments and tuffs totalling 100 m in thickness.

Most of the rocks are light coloured although some agglomerate and flowrocks are almost black. Many are porphyritic in texture with quartz, feldspar and biotite present.

The dominant rock types are rhyolite, rhyodacite, quartz porphyry, with minor trachyte and trachyandesite. Microscopically many show fluidal texture which may merge either into the vitroclastic texture of an ignimbrite, or into the fragmental condition of a carapace breccia or an agglomerate. Many flowrocks include angular and rounded cryptocrystalline light coloured lumps which were probably chilled carapace fragments re-incorporated in their own lavas by continued flowage. As a result many flowrocks appear agglomeratic in the outcrop, and their true structure can only be recognized under the microscope. Several fine grained rocks of fluidal appearance in outcrop proved to be crystal-vitric tuff or ignimbrite under the microscope (Wood, 1980).

Corroded and slightly brecciated phenocrysts of quartz and feldspar are widespread, with orthoclase and anorthoclase usually more plentiful than oligoclase. Biotite is also present in small amounts and is usually partly chloritised. Lithic fragments are also common, either devitrified, flow-banded, or spherulitic. Quartz veining, secondary sericite-muscovite, chlorite and zoisite-epidote may also be present. The flowrock groundmass usually consists of devitrified, flow-banded potassic silicate glass. Irregular patches in some rhyolites are occupied by coarser quartz and muscovite with disseminated sulphides and cassiterite. These are thought to be post-volcanic and related to the widespread mineralization in the district.

Minor trachyandesite occurs on the north slope of Says Hill as a dark brown rock intercalated with rhyolitic breccia. Phenocrysts of andesine and orthoclase, with accessory quartz and biotite lie in a trachytic groundmass of small feldspars.

Most of the rocks exhibit minor effects of metamorphism such as textural changes and retrogressive alteration. In mineralized fractures local effects such as greisenization and development of sericite or kaolin are evident.

All but the obviously sedimentary types are extremely tough, indurated and siliceous, such that their field identification is usually difficult and commonly in error. Slightly weathered outcrop surfaces reveal details of texture and structure better than freshly broken surfaces, many of which show only porphyritic texture and are completely uninformative as to structure.

Structures. The formation occupies a northeast trending belt, and is considered to be probably homoclinal with an approximate southeasterly dip of 30^0. Minor crush zones are present but no major fault displacements were found. Bedding features are rarely visible in outcrop, and are represented by a few thin beds of tuff exposed on the western slope of the Gap Range.

The indurated resistant agglomerates and flowrocks form low ranges of hills on each side of Vegetable Creek, the valley of which is located partly over the volcanic sediments. The position of the valley is more directly related, however, to zones of deep weathering in the bedrock which underlie Tertiary alluvium and basalt, and were the result of deep and prolonged chemical weathering in early Tertiary and Cretaceous time. This earlier phase of weathering and valley development may possibly have been structurally controlled by the sedimentary sequence.

Mineralization. In addition to several larger lodes, hundreds of veinlets were observed by Wood (1980) in these rocks. The mineralization is localized along pre-existing joint-fractures and preferentially along those of particular orientations. Several common orientations have been mapped by Wood (1980), all with steep to vertical dip. The writer of this thesis has made similar observations. The fact that mineralization is most frequently present in only one or two sets and is absent in joints of different orientation was interpreted by Wood (1980) as an indication of a specific phase of mineralization event which occurred in a restricted time in the sequence of development of the various sets of joint-fractures. The formation as a whole is pervasively mineralized. On the basis of this observation, Wood (1980) suggested that if an efficient method of extraction could be devised, the formation would provide a large reserve of ore. Maniw (1984) proposed, however, that the grades of the near surface mineralization at Emmaville is too low to support even an open pit mining operation.

Each of the joint-sets in most outcrops, consists of numerous subparallel fractures, and the way in which one set intersects and displaces another, enables the sequence of sets to be determined. The planar, parallel, and extensive nature of all the joint-sets indicates a tectonic origin due to regional crustal stress, and not the operation of processes such as hydrothermal or stockwork fracturing typical of porphyry copper or Mississippi Valley metal deposits (Wood, 1980).

In his report for the EZ-Loloma Joint Venture, Sainty (1984) recommended a 500 m x 200 m zone of strong quartz-sericite-pyrite alteration within the Emmaville stockwork for drilling. He suggested that this area might represent a fluid channelway overlying the crest or apex of a buried granite. Aside from the strong alteration, the area is also highlighted by wider vein selvages and higher Sn geochemistry. Maniw (1984) endorsed these recommendations.

Consequently, two drillholes, EZL-1 and EZL-2, were drilled by the Electrolytic Zinc Company of Australasia Ltd into this formation in 1985. These holes are located within the Loloma Ltd mining claims (Figure 2.4). Both holes were drilled inclined towards the south (Figures 2.5A and 2.5B) and are approximately 380 m and 420 m long, respectively. Although tin mineralization was still evident at depths, no significant grades were found to warrant further drilling.

Relationship to Adjoining Formations. The relationship of the Emmaville volcanics to older and younger rocks is of some significance. To the north the nearby Gulf Siltstone-Argillite Formation includes ashy and lithic tuff beds near the boundary, while pebble beds containing rhyolitic and granitic pebbles indicate the onset of volcanic and plutonic activity. Small masses of Emmaville rhyolite and agglomerate appear to be intercalated with the Gulf rocks, near the golf course and northwest of Tent Hill; these, however, could also have been faulted into position (Wood, 1980). Small clasts of derived Gulf siltstone are present in the basal rhyolitic agglomerate and breccia north of Says Hill.

In most respects the poorly exposed lower boundary thus appears to be locally uncomformable, and the general differences in bedding dip values tend to confirm this. The manner in which the Emmaville Volcanics pinch out northward against the Gulf rocks does not necessarily indicate regional unconformity, as it may be an expression of initial volcanic form, or possibly due to an unmapped fault (Wood, 1980).

The upper boundary of the Emmaville Formation is well exposed in the sluiced bedrock surface in Graveyard Creek near the Emmaville-Glen Innes highway. It is placed at the highest bed of white thin bedded vitric tuff and below the lowest bed of brown-weathered sandy crystal tuff (or tuffaceous sandstone) of the overlying Tent Hill Volcanic Formation. The beds are parallel on each side of the contact which is here conformable.

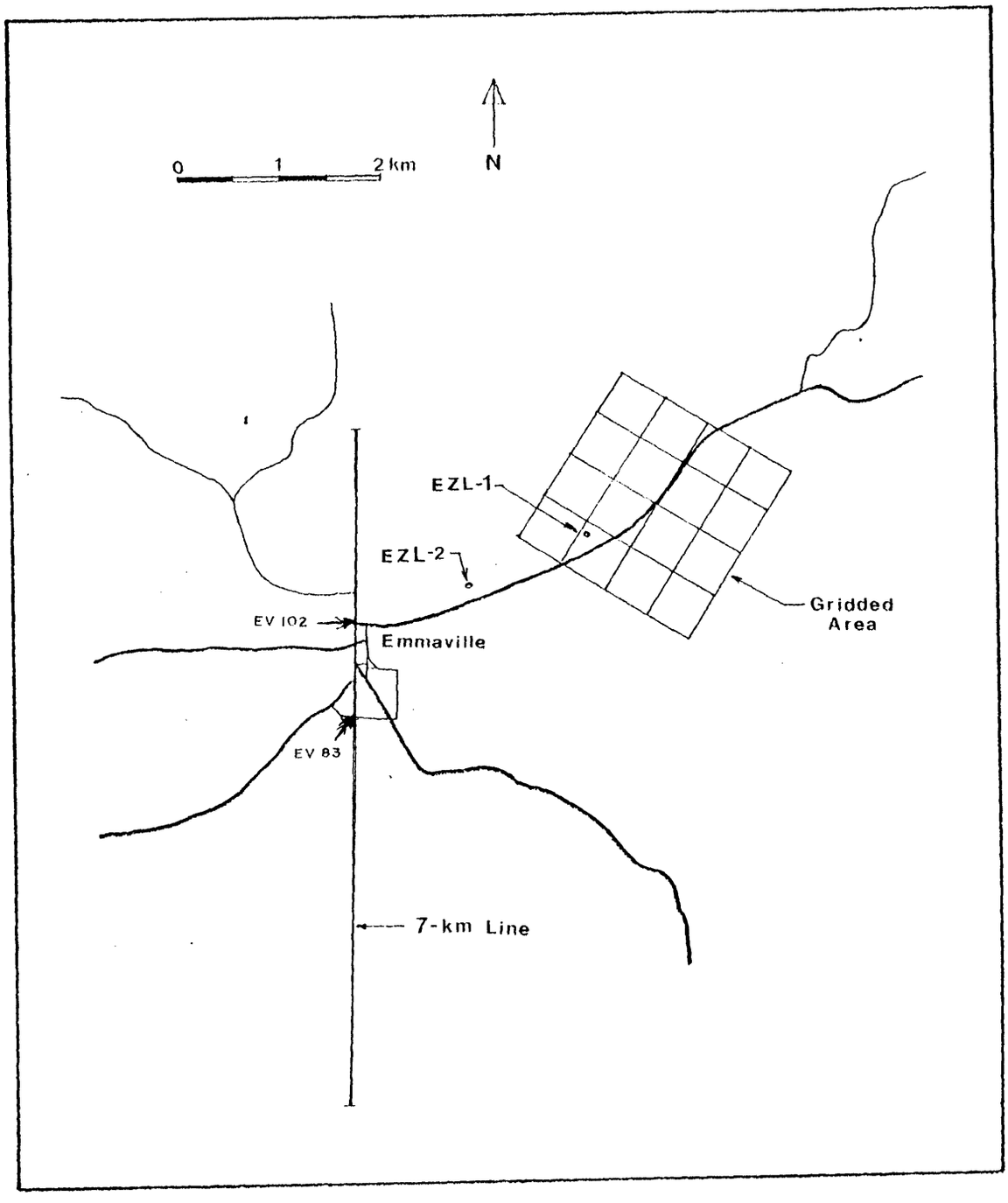

Figure 2.4 Location Map of Drillholes EZL-1 and EZL-2 in Relation to the Gridded Area and the 7-km Traverse Line

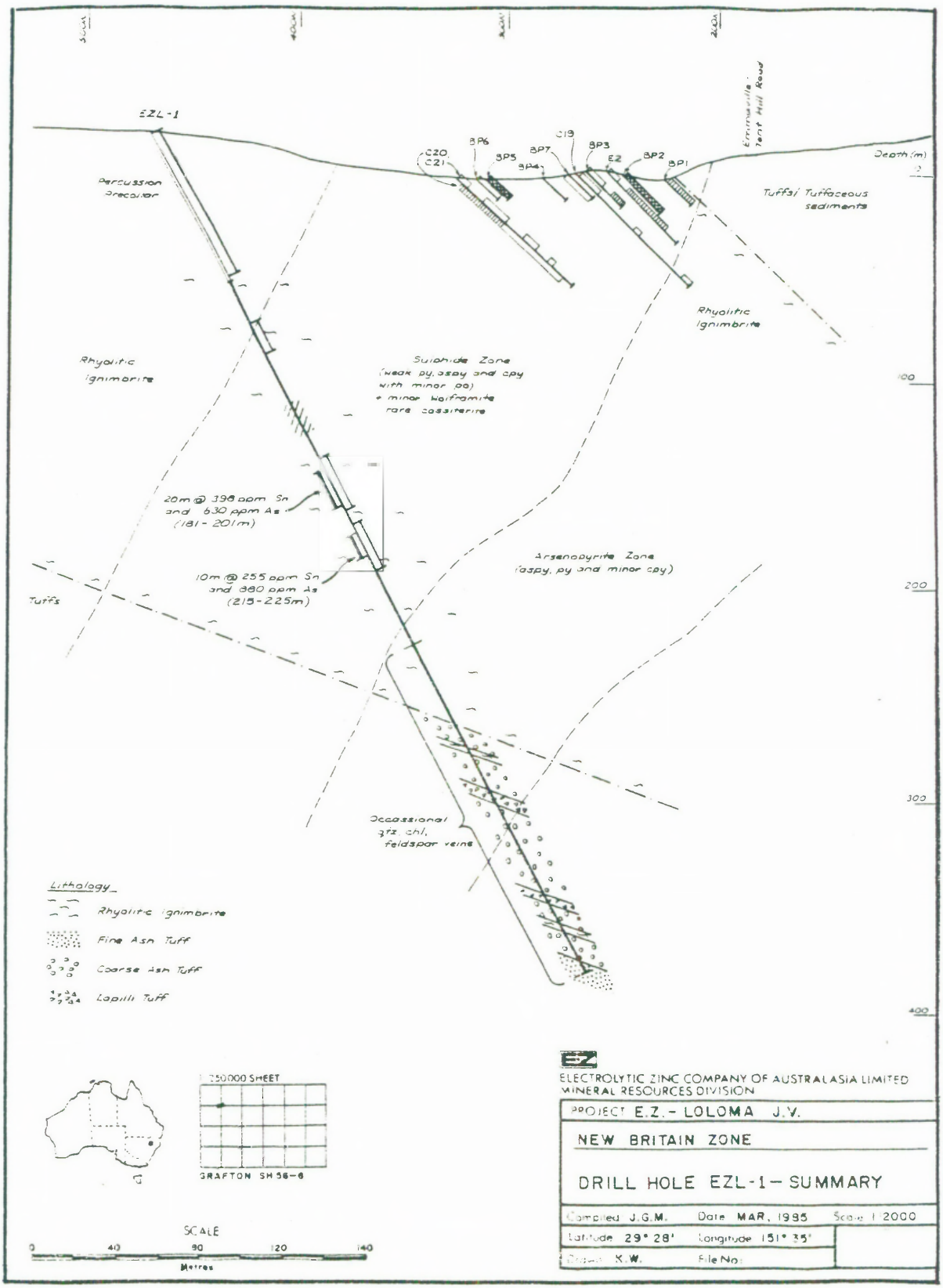

Figure 2.5A Geological Logging Section : Drillhole EZL-1

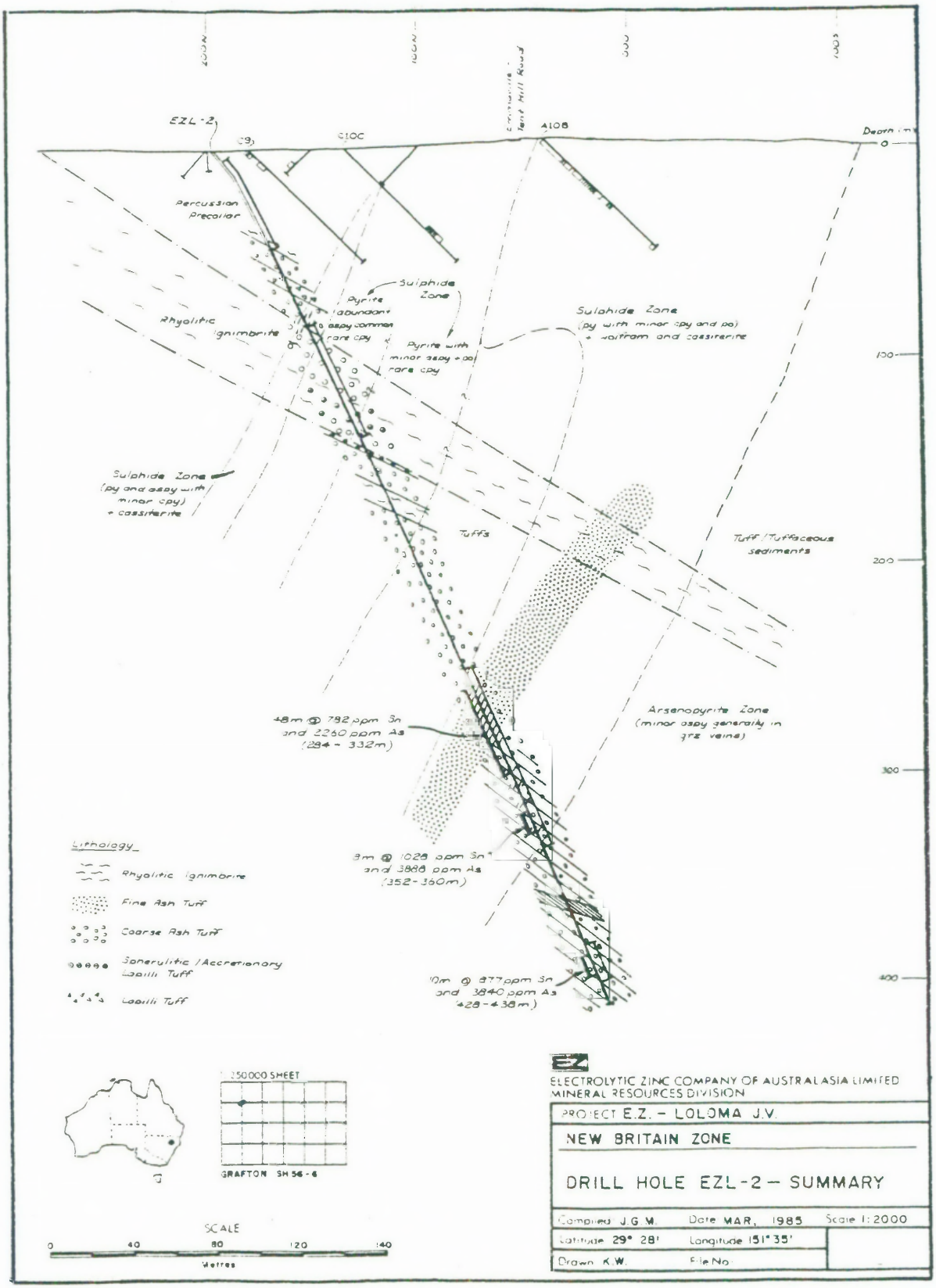

Figure 2.5B Geological Logging Section : Drillhole EZL-2

2.2.2.3 Tent Hill Volcanic Formation

The most prominent outcrop of this unit lies in the northeastern part of the district. Partial sections are observable in the streams to the north, and in the Bora Gully-Graveyard Creek area to the south.

The full thickness of the unit could not be measured, and is difficult to estimate because of limited outcrop and a gradational contact with the adjoining Dundee Rhyodacite.

Petrological Descriptions. The exposures are typically dark greenish black feldspar porphyrites, a situation which Wood (1980) considered misleading in two ways. Firstly much of the sequence is volcanoclastic and fails to crop out well, and secondly even some apparently fluidal rocks proved on microscope examination to be pyroclastic rhyodacite tuffs or ignimbrite. Beyond Tent Hill to the north, many dark porphyritic beds proved on close examination to be vitrophyric and vitroclastic tuffs, with welded pumiceous fragments. These are especially notable in the so-called chilled zone against the Gulf siltstones near the Ottery Mine.

Typical flowrocks consist of dense greenish-black dacite-porphyrite with prominent phenocrysts of andesine, hornblende biotite and lesser clinopyroxene. On etched surfaces a prominent flow-lamination parallels bedding in underlying tuffs, and is well exposed at Graveyard Creek. Bedded volcanic sediments include coarse sandy tuff (mainly crystal-vitric) felsitic breccia, and ignimbritic tuff.

Structures. The unit forms a submeridional belt along the east side of the Emmaville volcanics, which it overlies conformably at the southern end. At the northern end it overlaps with unconformity on to the Gulf Formation, but dips more steeply and irregularly, possibly because of local faulting and granitic intrusion. In the workings just north of Green Swamp Creek steeply dipping tuffaceous sandstone appears slightly crushed and sheared, probably by the emplacement of the nearby granite body (Wood, 1980).

Mineralization. Few outcrops on hillsides reveal significant mineralization although many have rust-stained fractures, and may have been mineralized. Alluvial deposits worked at Bora Gully and Bourke's Hill, contained tin which must

have been locally derived from bedrock formations nearby. In those at Bora Gully the tin would have been mainly from a major zone of mineralization in Emmaville rocks that extends along the east side of the Gap Range and through the head of Bora Gully itself. The tin at Bourke's Hill could not have had such a source since most of the alluvial area overlies and is flanked by the Tent Hill Volcanics.

Traces of mineralized veinlets are visible in the deeply weathered bedrock floor of this unit's outcrops in a sluiced area south of the road from the Bora Gully field. These are in the form of small parallel ridges of grey-coloured crumbling sandy clay in the otherwise yellow-brown weathered rock, and possess the double-banded central-veinlet structure as found in Emmaville rocks. Although inconspicuous and unremarkable, such mineralization is most probably present in the bedrock floor of the Bourke's Hill area too (Wood, 1980).

2.2.2.4 The Minor Intrusive Rocks

These rocks are present in a number of small granodiorite or related porphyrite stocks and dykes which appear to be satellite bodies of the Mole Granite batholith. All have tin mineralization evident to some degree and are considered by many to be precursors and to some extent agents of the mineralization.

These are probably about the same age as the Mole Granite, which on one sample only is dated at 236 million years (Prof. Runnegar in his personal communication with Prof. Wood). They invade all the aforementioned rock units in the Emmaville district and, although no particular sequence is discernible, are clearly younger than the Dundee Rhyodacite.

Five units have been mapped by Wood (1980) and these are the following:

1. Culaden Micrographic Granodiorite
2. Hell Hole Micrographic Granodiorite
3. Ottery Adamellite-Porphyrite
4. Summit Porphyritic Granodiorite
5. Says Hill Quartz-Orthoclase Porphyry

The units listed above have certain features in common (Wood, 1980) :

1. general NE or E elongation of form, with one case of NW elongation as well
2. remarkably consistent width of body form (dyke-like)
3) sharply definable contacts, with local zones of contact alteration (mainly silicification)
4. chilled border zones
5. pale colour, a micrographic-porphyritic texture, with a wide range in grainsize
6. mineralization to greater or lesser degree.

The first three features listed above indicate direct structural control of emplacement by pre-existing fractures in the host rocks (least in the Says Hill and Mine Hill bodies).Feature 6 suggests that they are directly derived from the Mole Granite batholith. Regional gravity data for the district could be interpreted as evidence of a broad subsurface granite mass or "shelf" extending from the exposed boundary of the batholith southward towards Emmaville (Wood, 1980).

Only the last two units mapped by Wood have been traversed by the gravity lines discussed in this thesis. The descriptions of the other three units are also included here so that readers can draw parallel interpretations from them. Chapman (1983) conducted gravity surveys over the Ottery mine and encountered the same problems experienced by the writer of this thesis.

Culaden and Hell Hole Micrographic Granodiorites. These bodies are typically assemblages of twinned andesine (40%), idiomorphic biotite and lesser hornblende (30%), with interstitial micrographic quartz and feldspar (Wood, 1980). The colour ranges from pale grey to white. The bodies are medium in texture. Disseminated pyrite and other sulphides are evident in many samples.

Well developed contact zones of silicification in the Gulf host rocks surround the intrusive bodies and include minor muscovite and sulphides.

The forms of the intrusions clearly result from pre-existing fracture control during emplacement; also the way in which the bodies thicken against and turn

parallel to the base of the Tent Hill formation signifies structural control by the basal unconformity surface.

Ottery Adamellite Porphyrite. The Ottery Mine in the northeastern part of the district lies entirely within this body, which hosts the arsenopyrite-cassiterite ore.

The unit is a medium to coarsely porphyritic pale grey rock with conspicuous zoned phenocrysts of feldspar, lesser quartz biotite and hornblende in a granophyric matrix. The body is roughly lensoid, is localized along the Tent Hill basal unconformity, and flanked to the west by Gulf Siltstone and to the east by Emmaville rhyolite-tuff. The contact zones are slickensided or phyllitic, bleached and sericitized (Wood, 1980).

Summit Porphyritic Granodiorite and Says Hill Quartz-Orthoclase Porphyry. The former crops out among Emmaville volcanics on the unnamed summit ridge of the low range north of Vegetable creek and the latter lies on the ridge to the north of Emmaville township (Figure 2.3).

Both these units are pale brown to red-brown in colour, dense and tough, and contain fine to medium grained phenocrysts. The mapping of their boundaries among the almost similar porphyritic Emmaville volcanics is difficult, and the forms shown on the map are only approximations.

The Summit Porphyritic Granodiorite consists of phenocrystic quartz, glomeroporphyritic andesine (commonly zoned) with lesser hornblende and biotite carrying apatite and zircon, in a fine groundmass of the same minerals (Wood, 1980).

The Says Hill Quartz-Orthoclase Porphyry contains idiomorphic orthoclase (80%), quartz and minor biotite, in a microcrystalline groundmass (Wood, 1980).

The origin of these bodies is somewhat uncertain and difficult to ascertain on the basis of the meager available information. Conceivably they could be shallow intrusive correlatives of the Emmaville volcanic assemblage and hence, is of the same age (Wood, 1980). They possess contact zones of slight alteration and sericitization, but more significantly have minor arsenopyrite-cassiterite mineralization. If the latter association is real (and not accidental) then they must be correlated

with the foregoing intrusives and the Mole Granite, and therefore must be much younger than the Emmaville host rocks (Wood, 1980).

Mineralization. All the intrusive rocks described above contain indications of mineralization, from relatively minor veinlets, to fissure veins, up to the largest lode deposit in the district at the Ottery Mine. The veinlets and fissure veins are all well defined and were emplaced in a solidified and jointed host rock from which many extend without change into the adjoining country rock. The mineralization thus did not accompany the emplacement of the host rocks but followed it (Wood, 1980).

Chapter 3

DATA ACQUISITION

Gravity and levelling surveys are usually carried out following more or less standardized procedures. Methods used in both types of surveys are discussed and described in detail in several textbooks. Trivial as the procedures in gravity surveys may seem for experienced gravimeter operators and geophysicists, beginners normally find themselves in a confusing situation when they plan a gravity survey for the first time. This chapter is thus included in the thesis for two main reasons:

1. to explain the approach/techniques employed in acquiring the data and
2. to provide the reader (especially students) with a working knowledge in gravity surveys.

The field procedure in levelling surveys to determine the elevations of gravity stations is also discussed to some extent for a more comprehensive presentation. A section containing the definition of terms commonly used in levelling surveys is included to facilitate the discussions in the succeeding sections.

3.1 Gravity Survey Procedures

Several field procedures were employed by the writer which will be referred to throughout the thesis as Procedure I, Procedure II and Procedure III. Their advantages and drawbacks will be pointed out.

A common feature of all procedures is that repeated readings are taken at some gravity stations to control instrumental drift and temporal variations of the gravity field.

3.1.1 Procedure I

This is the procedure most frequently adopted by geophysicists in cases when stations are laid out in a grid. It is easily explained with the help of a schematic diagram shown in Figure 3.1.

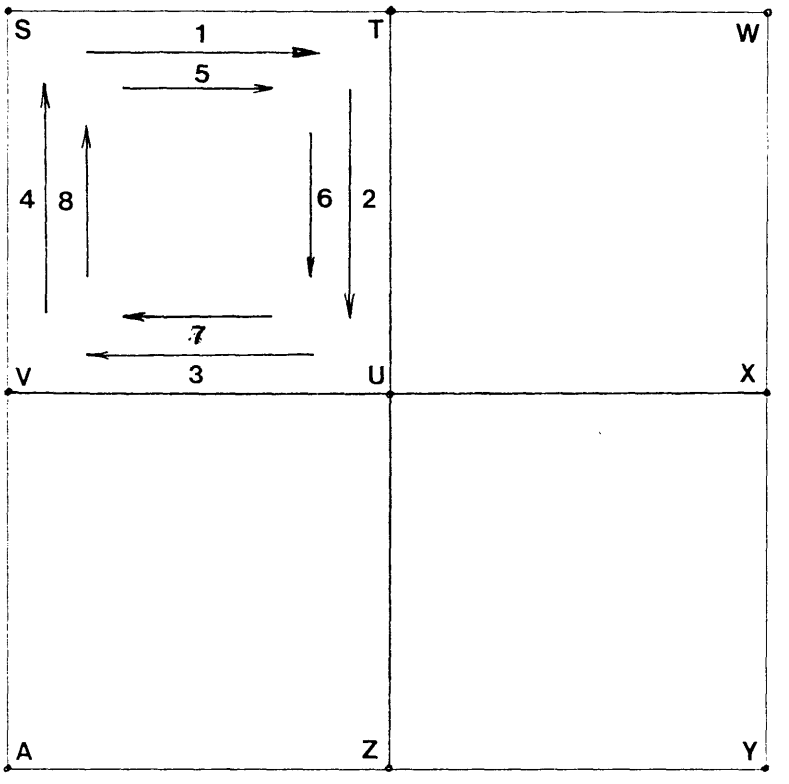

Figure 3.1 Procedure I. The arrows point to the direction of the operator's movement and are numbered according to the sequence of operation.

The survey is started at station S where a gravity reading is taken. Subsequently gravity readings are taken at T, U, V and back at S. The times when the readings are carried out are recorded. The loop STUVS is repeated so that at least two readings taken at different times are available for each gravity station. In this manner the drift of the gravity meter is monitored. The reason for monitoring the meter drift and the computation involved in correcting for this drift are discussed in Chapter 4.

Starting from either station T, U or V another survey loop may be carried out following the steps just described.

A modification of Procedure I is illustrated in Figure 3.2. The time interval between readings on a station is shorter. The monitored drift is thus more reliable and more likely to be linear. More readings are available for the computation of the drift correction. More time, however, is needed to complete the survey as the

number of readings increases. Since its advantages outweigh its single drawback, it was used in surveying the control stations in the gridded area.

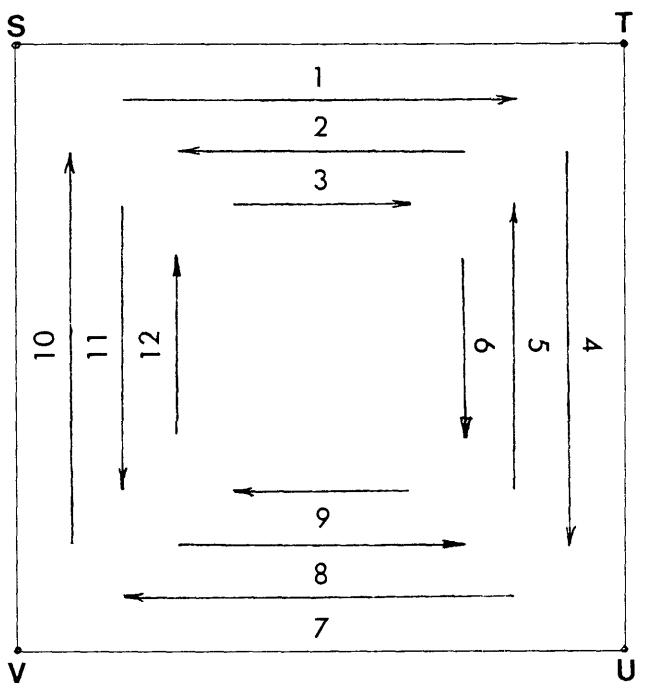

Figure 3.2 Modification of Procedure I

3.1.2 Procedure II

This procedure is commonly used in undertaking detailed gravity surveys.It was employed in taking measurements over the intermediate stations. Intermediate stations are those stations spaced 50 m apart and located between the control stations.

The procedure entails the prerequisite of having established the relative differences between the gravity values of control stations. This can be accomplished by using either Procedure I or Procedure III.

The detailed survey is started by taking a reading over one of the control stations. Readings are taken over 9 -10 intermediate stations and the loop is closed by taking a reading over the next control station.

This procedure has two advantages. Short distances are travelled and less time is spent to complete the survey. The drawback is that only one reading is taken at each station. This drawback, however, can be minimized by taking extra care in setting up and reading the gravity meter.

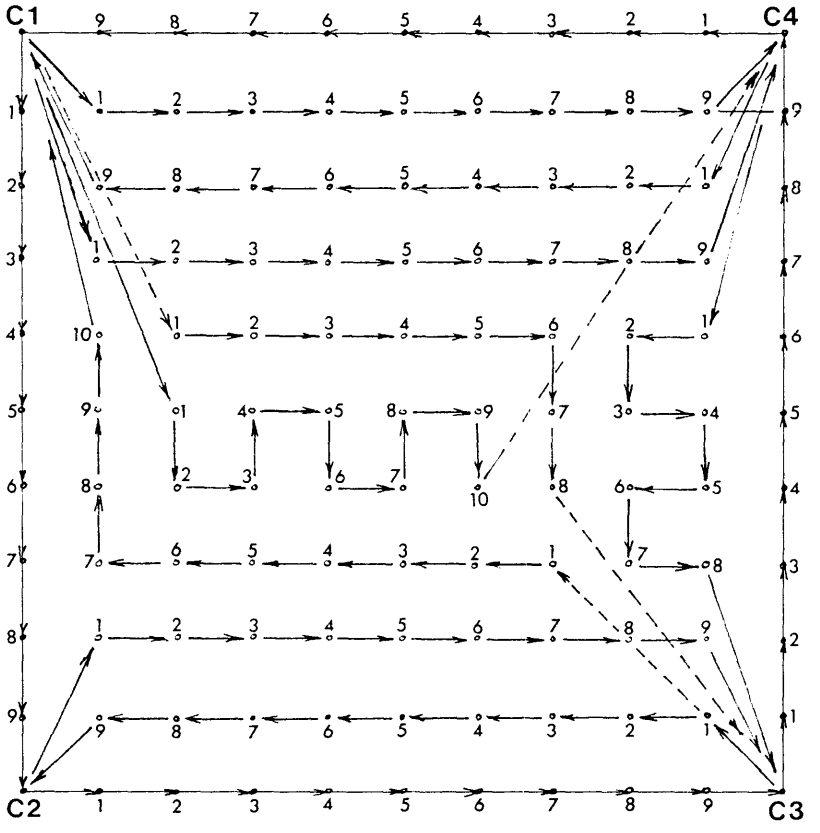

Figure 3.3 Procedure II

3.1.2 Procedure III

This is the procedure employed in running the gravity survey over the 7-km line. In this procedure readings are taken along traverse lines as schematically shown in Figure 3.4.

The survey may be started from any point on the traverse line. The gravity survey along the 7-km line was started at station EV 102, the base station.

After taking the reading at the first point, gravity readings are obtained at

a number of successive stations along the traverse line. To control instrumental drift and temporal variations in the gravity field it is necessary to return to the starting point within two hours and to repeat the readings for all stations along the traverse. The number of stations occupied before returning to the starting point is dependent on the distance between stations and the speed and efficiency of the operator.

In cases when stations are laid out in a grid the differences between readings over the end stations, say between A and H or G and N may be determined by using Procedure I.

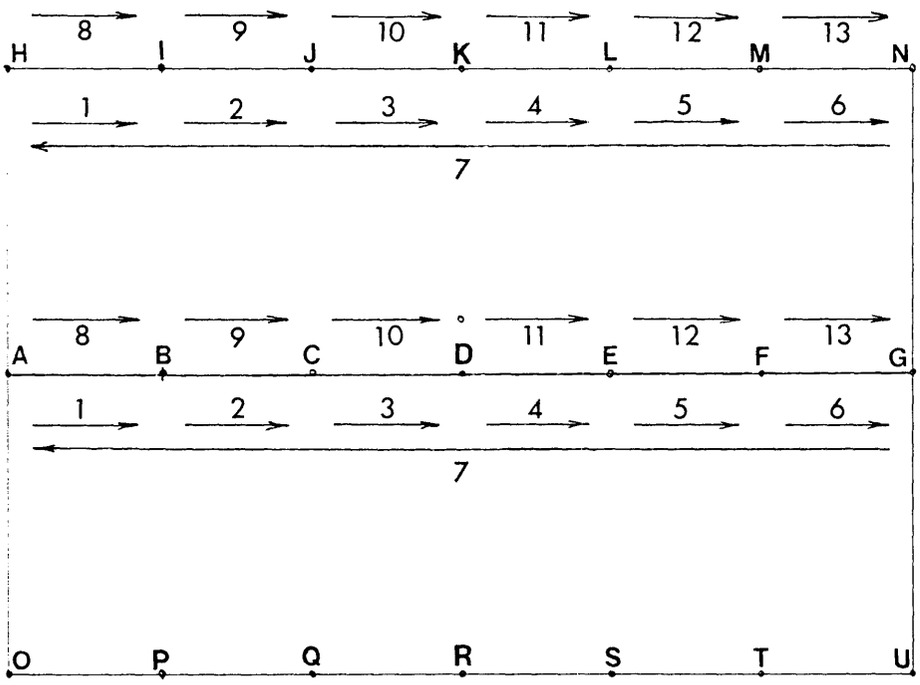

Figure 3.4 Procedure III

Although less time is spent to complete the survey by using this procedure, it is more tedious to use because of the longer distance involved in returning to the starting point. The necessity of having to take all the second readings within the 2-hour limit cancels the alternative of the operator to rest.

3.2 Levelling Surveys

Depending on the accuracy required, elevations of gravity stations may be determined by either gravitational, angular or hypsometrical levelling methods. Gravitational methods include spirit levelling, e.g., dumpy-level surveys; angular methods, the application of trigonometry or tacheometry; hypsometry, those methods which depend upon variations of the pressure of the atmosphere, as utilized in the barometer. These three systems in the general sense represent three degrees of accuracy in descending order (Higgins, 1970).

The gravitational method, being the most accurate of the three, was used in determining the elevations of the 141 gravity stations laid out 50 m apart along the 7-km traverse line and some of the stations in the gridded area.

The elevations of most of the stations in the gridded area were interpolated from the 1:10000 topographic map prepared by the EZ-Loloma joint venture. Additional control in interpolation was provided by a 1:5000 topographic map of the same area.

Two of the gravitational methods are in common use, the Rise and Fall method and the Height of Collimation method (Bannister and Raymond (1977). The latter (also known as Height of Instrument method) was employed in this study and will be discussed in Section 3.2.2. The former will likewise be discussed in Section 3.2.3.

3.2.1 Definition of Terms

Observed station or staff station is a station over which the levelling staff is held while the latter is being sighted and read.

Occupied station is a station where the level is set up while the sightings and reading are being performed.

Datum is the plane or surface to which elevations are referred.

Bench marks are permanent or semipermanent physical marks of known elevation. A good bench mark is a bronze disk set either in the top of a concrete post or in the foundation wall of a structure. Other locations for bench marks are the top of a culvert headwall, the top of an anchor bolt, or the top of a spike driven into the base of a tree.

Height of instrument, also known as height of collimation, is the elevation of the plane of sight; in practice, usually of the horizontal crosshair in the telescope of the level.

Backsight is a reading taken on a staff held at a point of known elevation. Usually abbreviated B.S., it is the first reading taken on setting up the level anywhere and is taken on a bench mark at the beginning of all levelling operations.

Foresight (F.S.) is a reading taken on the staff held on a point of unknown elevation in order to ascertain what distance that point is below the plane of the height of instrument, and thus to determine the elevation of the ground below the staff. This is the last reading taken before transferring the level and, as a good practice, is taken on a bench mark at the close of a day's operations.

Intermediate sights are readings taken with the staff held over stations between a "backsighted" station and a "foresighted" station before moving the level from its position.

Turning point is a staff station on which two staff readings are taken: a foresight prior to removing the level and a backsight in order to fix the new height of instrument or to set up the level.

3.2.2 Height of Collimation Method

The survey is usually started by selecting a suitable starting point. A bench mark is an ideal choice for this and is consequently commonly chosen.

The first reading taken is a backsight with the levelling rod or staff held over the selected bench mark. This backsight is added to the elevation of the bench mark to determine the height of the instrument.

Without removing the level from its position, take intermediate sights if conditions permit. If no other station may be sighted, a foresight is taken on a selected station before moving the level. The elevation of this "foresighted" station is obtained by subtracting the foresight from the height of instrument.

Then, without removing the staff from its position, the level is transferred and set up somewhere between the last "foresighted" station and the other stations. Once again, a backsight is taken, intermediate sights, a foresight and so forth.

The series of activities outlined above is repeated until the end of a day's operation which is usually concluded by taking a foresight on a bench mark. If no mistake has been made the elevation of this bench mark computed from the survey data should be equal to its established elevation. If not, then the difference is the amount of error. In places where bench marks are either so far apart or simply not available, it may be necessary to repeat the operations in the reverse direction to check the accuracy of the survey (Higgins, 1970).

The main errors affecting accuracy in levelling are:

1. Errors due to curvature and refraction,
2. Errors in reading the staff,
3. Errors due to the bubble not being centered,
4. Errors due to the instrument not being in adjustment,
5. Errors due to differential settlement of the tripod,
6. Errors due to tilting and settlement of the staff (Bannister and Raymond, 1977).

The nature of these errors and their magnitudes are amply described in modern textbooks on surveying. The last five errors can be minimized by regular adjustment of the instrument and by being careful in setting up the level and holding the staff making sure that it is vertically positioned over well-chosen stable ground. Double-checking the readings helps in minimizing these errors. The first type of error may be minimized by placing the level approximately equidistant from the backsight and foresight staff positions.

The procedure described above and the computations involved can be more easily understood by using examples. Shown in Figure 3.5 are some of the backsights and foresights that were actually recorded during the fieldwork undertaken for this study.

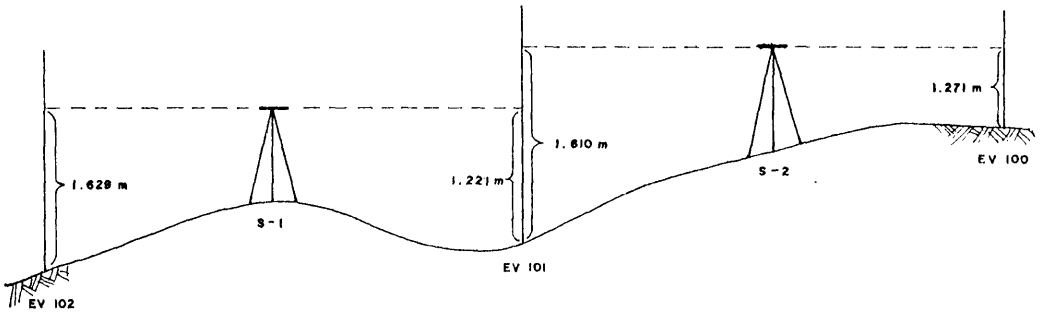

Fig. 3.5 INSTRUMENT SET-UP AND READINGS MADE IN HEIGHT OF COLLIMATION METHOD

The height of the line of collimation above the datum is found by adding the backsight obtained with the staff held on a point to the reduced level of that point. Thus in Figure 3.5 the height of the instrument at the first set-up station, S-1, is 890.00 m + 1.629 m = 891.629 m. Subtracting the foresight at this point from the

height of instrument gives the reduced level of station EV 101 which is 890.408 m. In a like manner, the height of collimation at S-2 is obtained by adding the backsight reading (1.610 m), taken with the staff still held over EV 101, to the computed elevation of EV 101. Thus, the height of instrument at S-2 is 892.018 m and the reduced elevation of EV 100 is (892.018 – 1.271) m or 890.747 m. Table 3.1 contains the recorded backsight (B.S.) and foresight (F.S.) readings for some 20 stations along the 7-km traverse line (see Figure 2.4 for its location) and is an example of how the height-of-instrument (H.I.) level survey data were recorded and how elevations were computed.

The procedure described above was followed in running the levelling survey over the 141 stations along the 7-km line and over some of the stations in the gridded area. Station EV 102, the base station for the gravity survey, was used as the starting point because no bench mark was near enough to the area at the time of the survey. An elevation of 890.00 m was assumed for this station, a value very close to the elevation of that station from the 1:50000 topographic map prepared by the Central Mapping Authority of New South Wales.

Table 3.1 Typical Height-of-Instrument Level Survey Record

OCCUPIED STATION	OBSERVED STATION	B. S.	H. I.	F. S.	ELEVATION
S- 1	EV 102	1.629			890.000
	EV 101		891.629	1.221	890.408
S- 2	EV 101	1.610			
	EV 100		892.018	1.271	890.747
S- 3	EV 100	1.826			
	EV 99		892.573	0.863	891.710
S- 4	EV 99	1.891			
	EV 98		893.601	1.020	892.581
S- 5	EV 98	1.485			
	EV 97		894.066	1.255	892.811
S- 6	EV 97	1.510			
	EV 96		894.321	1.185	893.136
S- 7	EV 96	1.463			
	EV 95		894.599	1.548	893.051
S- 8	EV 95	1.535			
	EV 94		894.586	1.419	893.167
S- 9	EV 94	1.345			
	EV 93		894.512	1.322	893.190
S-10	EV 93	1.790			
	EV 92		894.980	1.094	893.886
S-11	EV 92	1.918			
	EV 91		895.804	1.487	894.317
S-12	EV 91	1.675			
	EV 90		895.992	1.092	894.900
S-13	EV 90	2.058			
	EV 89		896.958	0.851	896.107
S-14	EV 89	1.729			
	EV 88		897.836	1.223	896.613
S-15	EV 88	1.858			
	EV 87		898.471	1.105	897.366
S-16	EV 87	2.056			
	EV 86		899.422	1.030	898.392
S-17	EV 86	1.899			
	EV 85		900.291	1.128	899.163
S-18	EV 85	1.867			
	EV 84		901.030	1.277	899.753
S-19	EV 84	2.183			
	EV 83		901.936	0.742	901.194

3.2.3 Rise and Fall Method

As in the height collimation method, the basic operation is the determination of the difference in level between two points. The principle is obvious when inspecting Figure 3.6. In Figure 3.6A the readings on S1 and S2 are 3.324 m and 1.567 m, respectively. The difference in level between S1 and S2 is denoted by R, i.e., R = 1.757 m. This value represents a rise in the height of ground at S2 relative to S1. In Figure 3.6B the reading at S2 (3.924 m) is greater than that at S1 (2.567 m). In this case, the difference in level, F, represents a fall in the height of ground at S2 relative to S1 by 1.357 m. Thus, if in any two successive staff readings the second reading is less than the first, we have a rise, and if the second reading is greater than the first, we have a fall.

If the elevation of one of the two points is known, the elevation of the other (reduced level abbreviated R.L.) may be found by either adding the rise or subtracting the fall. For example, if the level at S1 is 980.00 m above sea level then in Figure 3.6A,

$$\text{Level at B} = \text{Level at A} + \text{Rise}$$
$$= 980.00 \text{ m} + 1.757 \text{ m} = 981.757 \text{ m above sea level,}$$

and in Figure 3.6B,

$$\text{Level at B} = \text{Level at A} - \text{Fall}$$
$$= 980.00 \text{ m} - 1.357 \text{ m} = 987.643 \text{ m above sea level.}$$

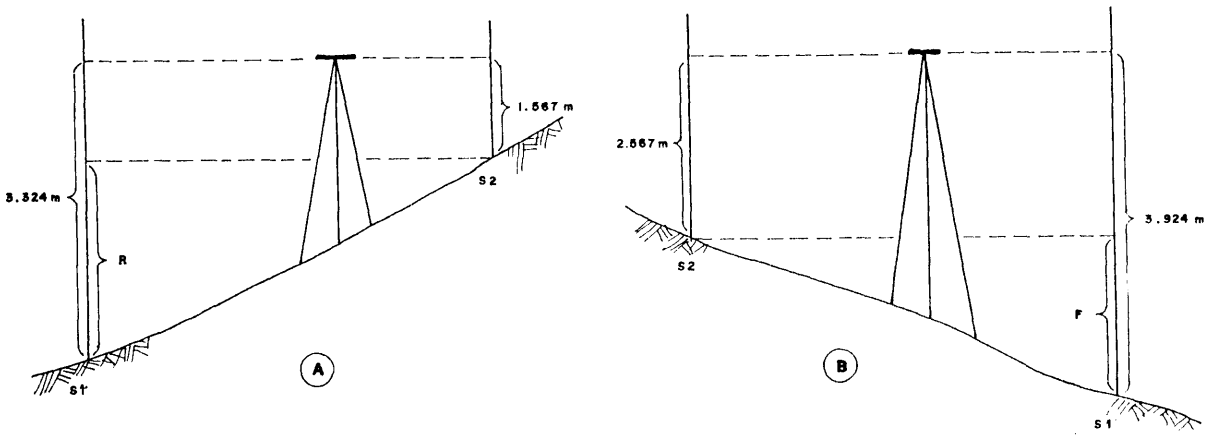

Fig 3.6 INSTRUMENT SET-UP AND READINGS MADE IN RISE AND FALL METHOD

If the data for the first ten stations in Table 3.1 were recorded in the Rise-and-Fall-Method format the record would be as follows:

STATION	B.S.	F.S.	RISE	FALL	R.L.
EV 102	1.629				890.000
EV 101		1.221	0.408		890.408
	1.610				
EV 100		1.271	0.339		890.747
	1.826				
EV 99		0.863	0.963		891.710
	1.891				
EV 98		1.020	0.871		892.581
	1.485				
EV 97		1.255	0.230		892.811
	1.510				
EV 96		1.185	0.325		893.136
	1.463				
EV 95		1.548		0.085	893.051
	1.535				
EV 94		1.419	0.116		893.167
	1.345				
EV 93		1.322	0.023		893.190

3.3 Density Determination

Rock density is one of the key variables in the reduction and interpretation of gravity data. The accuracy of the Bouguer anomalies, and even more so, their interpretation, depend greatly on the assumed densities of rocks in the surveyed area. It is therefore necessary to determine as accurately as possible the densities of surface rocks and, if available, of subsurface rocks.

Several methods and techniques have been tried and/or developed to determine the value of density most appropriate for use in gravity data reduction (Bouguer plate and terrain corrections) and interpretation. The most commonly used of these techniques are (1) laboratory measurements and (2) density-profile method. The first one and the results obtained from it will be discussed in the following section. The second technique will be discussed in Chapter 4.

3.3.1 Laboratory Measurements

Of all the methods, this is the most direct in approach. The mass of a sample is measured with a suitable balance and its density is computed using the well-known formula

$$\rho = \frac{w}{v} \tag{3.1}$$

where ρ = density of sample, w = mass of sample and v = volume of sample. The volume of a sample can easily be determined by submerging it in a sufficiently large graduated beaker containing a known volume of water. The volume of the sample is simply the difference between the volume read from the graduations while the sample is in the water and the predetermined volume of water. The volume of the sample need not even be measured directly. Density may simply and easily be determined by weighing the sample in air and then in water. The density is computed using the formula below:

$$\rho = \frac{w_a}{w_a - w_w} \tag{3.2}$$

where ρ = density, w_a = mass in air and w_w = mass in water.

The method discussed above has the advantages of simplicity and speed. The results obtained, however, are not so accurate, especially when samples are sedimentary porous rocks. Water seeps easily into their pores. The density of a rock

depends entirely on the degree to which its pores are filled with water. To offset this disadvantage, two densities are, in practice, usually determined: one after oven-drying the sample, the other after saturating it with water. The densities (dry and wet) and the porosity of a sample are computed by using the following set of formulas:

$$\rho_d = \frac{w_d}{w_{wa} - w_{ww}} \tag{3.3}$$

$$\rho_w = \frac{w_{wa}}{w_{wa} - w_{ww}} \tag{3.4}$$

$$\phi = \frac{w_{wa} - w_d}{w_{wa} - w_{ww}} \tag{3.5}$$

where ρ_d = dry density, ρ_w = wet density and ϕ = porosity of the rock sample, w_d= mass of oven-dried sample in air, w_{wa}= mass of saturated sample in air and w_{ww} = mass of saturated sample in water.

Three sets of rock samples were collected for laboratory measurements. A *Mettler* balance accurate up to 0.01 gram was used in weighing the samples.

SAMPLE NUMBER	ROCK TYPE	WET DENSITY*	DRY DENSITY*	POROSITY
12000N 10100E	Gs	2.68	2.66	0.013
11500N 09000E	Gs	2.69	2.68	0.003
11500N 09250E	Gs	2.68	2.68	0.004
12000N 10750E	Gs - Chert	2.40	2.26	0.144
11500N 09900E	Gs - Chert	2.83	2.76	0.069
11500N 10500E	Ev	2.59	2.57	0.022
11500N 10850E	Ev	2.64	2.63	0.008
11000N 09500E	Ev	2.58	2.55	0.031
11000N 10000E	Ev	2.64	2.64	0.006
11000N 10500E	Ev	2.62	2.61	0.008
10850N 09050E	Ev	2.60	2.59	0.012
10500N 09250E	Ev	2.56	2.55	0.011
10500N 10500E	Ev	2.62	2.62	0.005
10500N 10700E	Ev	2.59	2.57	0.012
10500N 10950E	Th	2.75	2.74	0.003
G1	Granite	2.61	2.60	0.011

* - Densities in g/cc
Th - Tent Hill Volcanics
Ev - Emmaville Volcanics
Gs - Gulf Siltstone-Argillite Formation

Table 3.3 Densities of Samples from the Gridded Area

First Set. Samples in this set were from the gridded area and consisted mostly of samples from the three major lithostratigraphic units traversed by the gravity survey - Gulf Siltstone-Argillite, Emmaville Volcanic and Tent Hill Volcanic Formations. One sample of the Mole Granite from its outcrop near Torrington was also included in this set. Both wet and dry densities were determined. The densities and porosities obtained are tabulated in Table 3.3.

It has been observed that the differences between the wet and dry densities are directly proportional to the porosity. This difference on the average is about 0.01 g/cc except for some samples which turned out to be either more weathered or more porous than the other samples. For example, Sample Nos. 11200N 10750E and 11500N 9900E, both chert, are relatively very porous as evident from the value of their porosity which are the highest values in the table. The densities of samples like these two were not included in computing for the average densities listed below.

1. Gulf Siltstone Formation - 2.68 g/cc

2. Emmaville Volcanic Formation - 2.60 g/cc

3. Tent Hill Volcanic Formation - 2.74 g/cc

On the basis of the observations described above, only the wet densities were determined for the other two sets of samples.

Second Set. The second set consisted of more samples from the gridded area. The granite sample in this set was taken by the EZ geologists near The Gulf, north of Emmaville where the Mole outcrops.The densities of these samples are tabulated in Table 3.4.

Listed below are the average densities of the second-set samples:

1. Gulf Siltstone-Argillite Formation - 2.71 g/cc

2. Emmaville Volcanic Formation - 2.62 g/cc

3. Tent Hill Volcanic Formation - 2.72 g/cc

SAMPLE NUMBER	ROCK TYPE	WET DENSITY*
11900N 09250E	Gs	2.70
11900N 09450E	Gs	2.67
11900N 09750E	Gs	2.71
11850N 09150E	Gs	2.74
11750N 09250E	Gs	2.70
11500N 09400E	Gs	2.68
11250N 09300E	Gs	2.75
11100N 09200E	Gs	2.72
11775N 09000E	Ev	2.66
11300N 10300E	Ev - Tuff	2.59
11250N 10800E	Ev - Tuff	2.61
11000N 09250E	Ev	2.63
11000N 09750E	Ev	2.59
10750N 10650E	Ev	2.55
10600N 10700E	Ev	2.63
10250N 10650E	Ev	2.53
10000N 10000E	Ev	2.55
10000N 10500E	Ev	2.54
11750N 11000E	Th	2.72
11200N 10950E	Th	2.74
10750N 10950E	Th	2.74
10600N 10900E	Th	2.70
10050N 09950E	Rhyodacite	2.65
G2	Granite	2.62

* - Densities are in g/cc
Th - Tent Hill Volcanics
Ev - Emmaville Volcanics
Gs - Gulf Siltstone-Argillite Formation

Table 3.4 Densities of Additional Samples from the Gridded Area

Third Set. The samples in the third set were collected along the 7-km traverse line. Most of the samples are surface rocks belonging to either one of the formations traversed by the survey line - Gulf Siltstone, Emmaville Volcanic or Tent Hill Formation. Also included in this set are two core samples from the holes drilled by the Electrolytic Zinc Company of Australasia Ltd.

It is apparent that the two subsurface samples, EZL 1 and EZL 2 have higher densities than their surface counterparts. EZL 1 sample was taken at a shallower part of the formation. It is generally accepted that density usually increases with depth. This increase of density of Emmaville formation samples with depth may prove to be a significant factor in the interpretation of the 7-km gravity profile.

SAMPLE NUMBER	ROCK TYPE	WET DENSITY*
EV 133	Gs	2.67
EV 135	Gs	2.73
EV 129	Ev	2.60
EV 128	Ev	2.60
EV 124	Ev	2.59
EV 117	Ev	2.59
EV 115	Intrusive	2.58
EV 80	Ev	2.63
EV 70	Ev	2.64
EV 65	Ev	2.63
EV 63	Ev	2.63
EV 30	Ev	2.64
EV 29	Ev-Th Contact	2.65
EV 28	Ev-Th Contact	2.68
EV 25	Th	2.77
EV 20	Th	2.79
EZL 1	Ev	2.66
EZL 2	Ev	2.79

* - Densities are in g/cc
Th - Tent Hill Volcanics
Ev - Emmaville Volcanics
Gs - Gulf Siltstone-Argillite Formation

Table 3.5 Densities of Samples from the 7-km Line

Average densities of the samples in the third set are as follows:

1. Gulf Siltstone-Argillite Formation - 2.70 g/cc
2. Emmaville Volcanic Formation - 2.60 g/cc
3. Tent Hill Volcanic Formation - 2.78 g/cc

Tabulated below are the average densities of the different rock types on the basis of the three sets of surface samples:

1. Gulf Siltstone-Argillite Formation - 2.7 g/cc
2. Emmaville Volcanic Formation - 2.6 g/cc
3. Tent Hill Volcanic Formation - 2.7 g/cc
4. Mole Granite - 2.6 g/cc