Chapter 5. Specifications of Base Equilibrium Values, Market Parameters and Exogenous Shifts

5.1 Introduction

The information required for operating the equilibrium displacement model in Equations (4.6.1)-(4.6.58) is in three parts: (1) base price and quantity values for all inputs and outputs, which define the base equilibrium status of the system; (2) market parameters required in the model, which describe the market responsiveness of quantity variables to price changes; and (3) the values of all exogenous shift variables for all simulated scenarios, which quantify the effects of new technologies and promotions. In this chapter, the specification of these data is described.

Under the three assumptions given in the model specification in Chapter 4 (Section 4.3), the total cost is equal to the total revenue for each industry sector, that is

(5.1) $$\sum_{i=n,s,m} u_{ie} Z_{ie} = \sum_{i=n,s} p_{ie} Q_{ie}$$ *export marketing equilibrium,*

(5.2) $$\sum_{i=n,s,m} u_{id} Z_{id} = \sum_{i=n,s} p_{id} Q_{id}$$ *domestic marketing equilibrium,*

(5.3) $$\sum_{i=ne,nd,se,sd,p} v_i Y_i = \sum_{i=ne,nd,se,sd} u_i Z_i$$ *processing sector equilibrium,*

(5.4) $$\sum_{i=1e,1d,2,3} s_{ni} F_{ni} = \sum_{i=e,d} v_{ni} Y_{ni}$$ *feedlot sector equilibrium,*

(5.5) $$w_1 X_{n1} + w_{n2} X_{n2} = \sum_{i=1e,1d} s_{ni} F_{ni}$$ *backgrounding sector equilibrium,*

(5.6) $$w_1 X_{s1} + w_{s2} X_{s2} = \sum_{i=e,d} v_{si} Y_{si}$$ *grass-finishing sector equilibrium.*

To keep the model and data requirements manageable, it is assumed in the above equalities that all by-products such as hide, offal, fat and trim in each sector are of zero value. In reality, these values are non-zero but less than a few percent of total sectoral revenues[1].

The input cost shares and output revenue shares for all sectors, which are required for solving the model, can be calculated after specification of the equilibrium prices and quantities. The cost share for 'other inputs' in each sector is calculated as the residual using the equilibrium identities in Equations (5.1)-(5.6).

In 5.2 and Appendix 3, the specification of a set of base equilibrium prices and quantities for all inputs and outputs is described. The base equilibrium values are specified as the average prices and quantities for 1992 to 1997. In other words, the study is based on an average situation during 1992-1997. Input cost shares and output revenue shares are derived accordingly. More details of the sources, the assumptions made and the derivation of prices and quantities of all sectors for each year of 1992 to 1997 are documented in Zhao and Griffith (1999).

Market parameters required in the model are specified in 5.3, based on information from existing empirical studies, economic theory and subjective judgement. These parameters include input substitution elasticities, product transformation elasticities, and various beef demand and factor supply elasticities. As discussed in Section 2.5.5, Chapter 2, the elasticity values are chosen to reflect a medium run time frame, which is assumed as the required time frame for the industry to reach a new equilibrium after an exogenous shock. Integrability constraints among the elasticities at the base equilibrium points as outlined in Section 4.5, including the curvature conditions, are ensured in the parameter specification.

In 5.4, the values of all exogenous shifter variables in the model are specified as 1% of the base price level of the relevant markets. In other words, results for all scenarios relate to equal 1% vertical shifts in the relevant demand or supply curves in the markets where the exogenous changes occur.

The chapter is summarised in 5.5.

---

[1] For example, using a price of $0.1/kg for all by-products (Griffith, Green and Duff 1991), the ignored revenue shares of by-products are around 3.5% for the processing sector, 1% for the domestic marketing sector and 2% for the export marketing sector.

5.2 Base Equilibrium Price and Quantity Values

5.2.1 Prices and Quantities

The annual quantities and prices of the four types of cattle or beef products at all production and marketing stages are required for the period of 1992 to 1997. The annual feedgrain consumption by the beef industry and the associated prices are also needed for the period. These include quantities of weaners, backgrounded cattle, grass/grain finished cattle, processed beef carcass, and final products as f.o.b. (free on board) export boxes and domestic retail cuts.

Significant effort has been invested in this study to compile a set of consistent equilibrium prices and quantities for all sectors and product types. There are no published data that are disaggregated to the level required in the model. In a spreadsheet established for the data derivation (Zhao and Griffith 1999), published data are taken from various government and industry agencies and other available sources, assumptions are made regarding the relationship of cattle prices and quantities at different levels, and the rest of the required prices and quantities are derived based on these assumptions.

The specification of prices and quantities for all inputs and outputs for all sectors are detailed in Appendix 3. The resulting average prices and quantities for 1992-1997 are listed in Table 5.1. Refer to Table 4.3 or Figure 4.1 in Chapter 4 for variable definitions.

5.2.2 Cost and Revenue Shares

Based on the price and quantity values specified in Appendix 3, the cost and revenue shares required in the model are derived for all sectors. The input cost shares for the 'other inputs' variables in all sectors are calculated as residuals using the equilibrium conditions in Equations (5.1)-(5.6).

The average total sector values ($TV_{(.)}$'s) and the cost and revenue shares ($\kappa_{(.)}$'s and $\gamma_{(.)}$'s) for all sectors for the period of 1992-1997 are summarised in Table 5.1. These cost and revenue shares are required for solving the equilibrium displacement model in Equations (4.6.1) and (4.6.58).

Table 5.1 Base Equilibrium Prices, Quantities and Cost and Revenue Shares (average of 1992-1997)

	Quantity and Price	Cost and Revenue Shares
Final Beef Products	**Export** (in *kt* and *$/kg*, shipped weight): $Q_{ne} = 110$, $p_{ne} = 5.66$, $Q_{se} = 665$, $p_{se} = 3.06$. $TV_{Qe} = 2658$ **Domestic** (in *kt* and *$/kg*, retail cuts): $Q_{nd} = 92$, $p_{nd} = 10.31$ $Q_{sd} = 404$, $p_{sd} = 7.81$. $TV_{Qd} = 4104$ $TV_Q = 6762$	**Export Marketing Revenue Shares:** $\gamma_{Qne} = 0.23$, $\gamma_{Qse} = 0.77$ **Domestic Marketing Revenue shares:** $\gamma_{Qnd} = 0.23$, $\gamma_{Qsd} = 0.77$
Wholesale Carcass	(in *kt* and *$/kg*, carcass weight) $Z_{ne} = 161$, $u_{ne} = 2.45$, $Z_{se} = 974$, $u_{se} = 2.13$. $TV_{Ze} = 2469$ $Z_{nd} = 128$, $u_{nd} = 2.70$, $Z_{sd} = 561$, $u_{sd} = 2.45$. $TV_{Zd} = 1720$ $TV_Z = 4189$	**Export Marketing Cost Shares:** $\kappa_{Zne} = 0.15$, $\kappa_{Zse} = 0.78$ $\kappa_{Zme} = 0.07$ **Domestic Marketing Cost Shares:** $\kappa_{Znd} = 0.08$, $\kappa_{Zsd} = 0.34$ $\kappa_{Zmd} = 0.58$ **Processing Sector Revenue Shares:** $\gamma_{Zne} = 0.09$, $\gamma_{Zse} = 0.50$, $\gamma_{Znd} = 0.08$, $\gamma_{Zsd} = 0.33$.
Finished Live Cattle	(in *kt* and *$/kg*, live weight) $Y_{ne} = 293$, $v_{ne} = 1.20$, $Y_{nd} = 232$, $v_{nd} = 1.34$. $TV_{Yn} = 662$ $Y_{se} = 1772$, $v_{se} = 1.03$, $Y_{sd} = 1019$, $v_{sd} = 1.21$. $TV_{Ys} = 3058$ $TV_Y = 3720$	**Processing Sector Cost Shares:** $\kappa_{Yne} = 0.08$, $\kappa_{Yse} = 0.43$, $\kappa_{Ynd} = 0.07$, $\kappa_{Ysd} = 0.29$, $\kappa_{Yp} = 0.12$. **Feedlot Sector Revenue Shares:** $\gamma_{Yne} = 0.53$, $\gamma_{Ynd} = 0.47$ **Grass Finishing Sector Revenue Shares:** $\gamma_{Yse} = 0.60$, $\gamma_{Ysd} = 0.40$
Feeder Cattle and Feedgrain	**Feeders** (in *kt* and *$/kg*, live weight): $F_{n1e} = 205$, $s_{n1e} = 1.12$, $F_{n1d} = 172$, $s_{n1d} = 1.02$. $TV_{F1} = 405$ **Feedgrain** (in *kt* and *$/kg*): $F_{n2} = 819$, $s_{n2} = 0.176$	**Feedlot Sector Cost Shares:** $\kappa_{Fn1e} = 0.35$, $\kappa_{Fn1d} = 0.26$, $\kappa_{Fn2} = 0.22$, $\kappa_{Fn3} = 0.17$. **Backgrounding Sector Revenue Shares:** $\gamma_{Fn1e} = 0.57$, $\gamma_{Fn1d} = 0.43$.
Weaner Cattle	(in *kt* and *$/kg*, live weight) $X_{n1} = 206$, $X_{s1} = 1542$, $X_1 = 1748$, $w_1 = 1.12$. $TV_{X1} = 1958$	**Backgrounding Sector Cost Shares:** $\kappa_{Xn1} = 0.57$, $\kappa_{Xn2} = 0.43$. **Grass Finishing Sector Cost Shares:** $\kappa_{Xs1} = 0.56$, $\kappa_{Xs2} = 0.44$.

Table 5.2 Published Estimates of Domestic Retail Beef Demand Elasticities for Australia

Source	Beef Demand Elasticities						Data Period	Area
	Beef	Lamb	Mutton	Pork	Chicken	Income	(Annual or Quaterly Data)	
Taylor (1961)	-0.96	*	*	*	*	*	1950/51-1959/60 (A)	Aust.
Van der Meulen (1961)	-0.71	0.49	*	*	*	0.40	1948/49-1959/60 (A)	Sydney
Taylor (1963)	-0.87, -1.03	*	*	*	*	*	1950/51-1959/60 (A)	Aust.
Marceau (1967)	-1.33	0.02	*	*	*	-0.24	1951-1963 (Q)	N.S.W.
Gruen, et.al. (1967, 1968)	-0.79, -0.96	*	*	*	*	*	1949/50-1964/65 (A)	Aust.
Van der Meulen (68)	-1.3	*	*	*	*	-0.24	1949/50-1961/62(A)	Aust.
Papadopoulos (71)	-2.06	-0.23	-0.13	1.43	*	0.98	1962(I)- 1970(II) (Q)	N.S.W.
Throsby (72)	-1.90	*	*	*	*	0.59	1962-1972 (Q)	Aust.
Throsby (74)	-0.76, -0.7~-1.0	0.04, 0~0.2	*	*	*	0.22, 0.2~0.4	1962-1972 (Q)	Aust.
Greenfield (74)	-1.71	*	*	*	*	1.23	1955-1972 (A)	Aust.
Main et.al. (76)	-1.38~-1.46	0.03~0.09	0.32~0.34	*	*	0.37~0.47	1962(I)- 1975(II) (Q)	Aust
Freebairn&Gruen (1977)							1962(I)- 1975(IV) (A)	Aust.
high prices	-1.85	*	*	*	*	*		
low prices	-0.90	*	*	*	*	*		
Johnson (1978)	-1.21~-1.56	*	*	*	*	0.38~0.46	1962(I)-1975(IV) (A)	Aust.
Fisher (1979)	-1.19	0.14	*	0.14	*	0.54	1962-1977(A)	Aust.
Murray (1984)							1949/50-1978/79 (A)	Aust.
AIDS	-1.95	0.32	0.18	0.19	0.09	1.18		
Translog	-1.42	0.15	0.20	0.13	0.01	0.93		
Addilog	-1.62	0.12	0.09	0.08	-0.03	1.36		
Dewbre et.al. (1985)	-0.98	*	*	*	*	*	*	Aust.
Martin&Porter (1985)	-1.13	0.06	0.20	0.63	0.19	0.68	1962(I)-1983(I) (Q)	Aust.
Chalfant&Alston (1986)	-1.38, -1.46	*	*	*	*	1.49, 1.46	1962-1983 (Q)	Aust.
Cashin (1991)	-1.24	-0.02	*	-0.20	-0.19	1.65	1967(I)-1990(II) (Q)	Aust.
	-0.82	-0.11	*	*	-0.36	1.38	1982(I)-1990(II) (Q)	Aust.
Harris&Shaw (1992)	-0.92	*	*	*	*	0.26	1960-1980 (A)	Aust.
Piggott *et.al.*	-0.42	0.43	*	0.13	-0.14	1.82	1978(3)-1988(4)	Aust.

Source: Griffith, *et al.* (1999a)

5.3 Market Parameters

Market elasticities are required to solve the displacement model specified in Equations (4.6.1)-(4.6.58). Values for these elasticities are specified below based on economic theory, existing econometric estimations and subjective judgement[2]. As discussed below, very limited empirical estimates are available for many of these elasticities. As a result, considerable uncertainty is involved when specifying the market elasticities (or parameters). In Chapter 8, a systematic approach to sensitivity analysis is developed to quantify the uncertainty in the model results with regard to the uncertainty in the choice of parameter values. In the context of the probability distributions developed in Chapter 8, the single value specified for each parameter below can be viewed as the 'most likely' value for the parameter. The integrability restrictions discussed in Section 4.5 are also guaranteed in the parameter specification.

5.3.1 Exogenous Beef Demand Elasticities

Domestic

The own-price and cross-price demand elasticities for domestic grainfed and grassfed beef at retail level (i.e. $\eta_{(Qnd,\ pnd)}$, $\eta_{(Qnd,\ psd)}$, $\eta_{(Qsd,\ pnd)}$ and $\eta_{(Qsd,\ psd)}$) are required for solving the model. As discussed earlier, Australia does not have a domestic grading system that could provide the data on separate grainfed and grassfed beef. Consequently, the published estimates on beef demand elasticities are all with regard to aggregated beef as a homogenous product. In the following, studies on beef demand elasticities are reviewed to provide references for the specification of demand elasticities for the two domestic beef products.

There is a large amount of literature dealing with domestic beef demand. Although data periods, model specifications and estimation methods are different in these studies, the range of the estimated demand elasticities is relatively stable. Both Richardson (1976) and Main, Reynolds and White (1976) reviewed some earlier estimates of domestic beef demand elasticities, and Griffith *et al.* (1999a) surveyed more recent studies. The published estimates are summarised in Table 5.2. As can be seen from the Table, the estimated domestic beef demand elasticities range from -0.71 to -2.06. The majority of the nearly 30 estimates reviewed are between -0.70 and -1.50, with -1.1 as the mid-point of the range. This compares to some

[2] including experts' opinions, such as those of my supervisors, and my own judgement.

earlier estimates of –0.9 to –1.0 for the United States and around -1.0 for the United Kingdom (see Throsby 1974 and references therein).

The majority of the Australian domestic consumed beef is grassfed, and this is especially the case for the early years that many of the reviewed estimates are based on. Thus the elasticities in Table 5.2 are considered to be a good indication of the domestic grassfed beef demand elasticity. Grainfed beef has a higher price and better quality in comparison to grassfed beef, and thus it is expected to be more price elastic than grassfed beef. In the base model, -1.1 and -1.6 are used respectively as the grassfed and grainfed beef elasticities for domestic demand. That is, $\eta_{(Qsd,\ psd)}$=-1.1 and $\eta_{(Qnd,\ pnd)}$=-1.6.

The cross-price elasticities need to satisfy the symmetry condition in Equation (4.5.11) of Chapter 4, ie. $\eta_{(Qnd,\ psd)} = (\lambda_{sd}/\lambda_{nd})\eta_{(Qsd,\ pnd)}$, where $(\lambda_{sd}/\lambda_{nd})$ is the ratio of the expenditure shares of the two types of beef. For the base equilibrium defined in Table 5.1, $\lambda_{sd}/\lambda_{nd}=(p_{sd}Q_{sd})/(p_{nd}Q_{nd})=3.3$.

Again, if taking the cross-price elasticities for beef in Table 5.2 as an indication of the grassfed beef cross-price elasticities, the consumption of grassfed beef should be more responsive to price changes of another type of beef than that of other meat products. Because many of the early studies concentrated on the estimation of the beef own-price elasticity using single equation methods, only limited cross-price estimates are available. The cross-price elasticities in Table 5.2 vary markedly even with conflicting signs, but the majority of the beef cross-price elasticities are between 0 and 0.2. In the base run of the model, the cross-price elasticity for grassfed beef with respect to changes in price of grainfed beef is taken as 0.3. This gives $\eta_{(Qsd,pnd)}$=0.3 and $\eta_{(Qnd,\ psd)}$=(3.3)(0.3)=0.99 by the symmetry condition.

Export

In comparison to research on domestic beef demand, there are fewer studies on the magnitude of the export demand elasticity for Australian beef It is generally believed that changes in the quantity of Australian beef export have only a minor influence on export prices ('small country' argument), and thus the export demand for Australian beef is relatively price elastic (Papadopoulos 1973, Parton 1978, and Scobie and Johnson 1979). As commented by Scobie and Johnson (1979), some earlier estimates for the export demand elasticity are often too small due to inadequacies in statistical techniques. In the EMABA econometric model (Dewbre et.al.

1985 and Harris and Shaw 1992), the export demand elasticity for Australian beef was estimated as –0.64 for the short run, -0.88 for the medium run and –1.25 for the long run. In some studies where an export demand elasticity for beef was required, researchers often choose values in an *ad hoc* manner. For example, Parton (1978) used an elasticity range of –1.0 to –2.0 for a high price regime and –0.25 to –1.0 for a low price regime.

Another popular approach to estimating the elasticity of export demand is to use a formula that relates the export demand elasticity of a country to the price responsiveness of other consumers and suppliers of the commodity in the world market and the quantity of the country's export in comparison with the quantities of other buyers and sellers. The simplest version of this formula, as used by Papadopoulos (1973) and Butler and Saad (1974), is $\eta_a=\eta/s_a$, where η_a is the export demand elasticity facing country *a*, η is the demand elasticity in the rest of the world and s_a is the share of the world market by country *a*. This simple formula is only true for the special case when there is no supply response from competing producers, no product differentiation among different countries in the world market and no government intervention in exporting or importing countries. It often produces very high export demand elasticities for commodities of which Australia's world market share is small. Taplin (1971), Scobie and Johnson (1979) and Cronin (1979) generalise the simple formula to relax some or all of the restrictions. Cronin's formula involves own-price elasticities, price transformation elasticities and the quantity shares for all importing and exporting countries. Scobie and Johnson (1979) estimated a value of -10.3 for export demand elasticity for Australian beef. Cronin (1979) estimated a value of -64 when a homogenous or perfectly substitutable beef from all countries is assumed and a value of -4 for a more realistic situation. Wittwer and Connolly (1993) also used Cronin's formula with the elasticity values in Tyers and Anderson (1992). Their calculated elasticity for beef is -4.5 for the short run and -14 for the long run.

In the current model, the export grainfed and grassfed beef is assumed nonsubstitutable in demand due to the fact that almost all grainfed beef are sold in Japan while the majority of grassfed beef go to countries other than Japan. As a result, the cross-price elasticities are assumed zero. Again, as grassfed beef constitutes the majority of Australian beef exports and are sold to various countries, the reviewed export beef demand studies are more relevant to

grassfed beef. In the base model, the export demand elasticity for grassfed beef is specified as -5 based on the above review[3], that is, $\eta_{(Qse,pse)} = -5$.

About 95% of the Australian grainfed beef goes to Japan, and Australia is the major country that supplies the high quality Japanese grainfed market. Australian high marbling grainfed beef is a highly specified product that leaves little substitutability with other countries' products (which implies a very small price transformation elasticity of supply). As a result, the demand elasticity for the Australian grainfed feed beef is expected to be less elastic than the grassfed beef. A value of -2.5 is used for the base model, ie. $\eta_{(Qne, pne)} = -2.5$.

5.3.2 Exogenous Factor Supply Elasticities

Weaner Supply

There are many studies on the supply response of Australian agricultural products, where the supply elasticity of beef to changes in its own price is estimated. Econometric models or mathematical programming models of Australian broadacre agriculture are often used in these studies. Unlike demand response, it often takes several years for cattle producers to respond fully to an initial price change. As a result, the magnitude of the supply elasticity relates to the time frame considered. In Table 5.3, the published estimates of Australian beef supply elasticity for various time runs are summarised based on a review by Griffith, *et al.* (1999b). As only the own-price elasticity of weaner supply is required in the model, the cross-price elasticities in these studies are not reviewed. It can be observed from Table 5.3 that the estimates for the cattle supply elasticity range from 0.05 to 1.01 for short-run, 0.10 to 1.34 for medium run and 2.0 to 2.99 for long run. In a study on American beef processing industry, where 0.15, 0.30 and 3.0 are used respectively for the short, medium and long run elasticities of cattle supply, Mullen, Wohlgenant and Farris (1988) referenced estimates of 1.0 and 1.06 for this parameter for the UK and West Germany respectively. Based on these estimates, a value of 1 for the cattle supply elasticity is considered reasonable for the medium run time frame considered in the model.

[3] As can be seen from the sensitivity analysis in Chapter 8, the model results become insensitive to this parameter when the value is large. For example, there is little difference in the results when the demand elasticity is changed from -10 to -20.

Table 5.3 Published Estimates of Beef Cattle Supply Elasticity for Australia

Source	Own-Price Elasticity	Time-Run	Area
Gruen *et. al.* (1967)	0.16	S	Aust.
Freebairn (1973)	0.11	4-yr	NSW
Wicks & Dillon (1978)	0.69	S	Aust.
	0.90	M	Aust.
Longmire *et.al.* (1979)	0.69	S	Aust.
Vincent, Dixon	1.01	S	pastoral zone
& Powell (1980)	0.48	S	wheat/sheep zone
	0.34	S	high rainfall zone
Fisher & Munro (1983)	0.70	S	NSW wheat/sheep
	0.40	S	NSW pastoral
Easter & Paris (1983)	0.51	S	Aust. table beef
	0.62	S	Aust. Manufacturing beef
Dewbre *et. al.* (1985)	0.30	M	Aust.
	2.00	L	Aust.
Hall & Menz (1985)	1.34	M	Aust.
Adams (1987)	0.60	S	Aust.
Hall, Fraser	0.50	M	Aust.
& Purtill (1988)	2.40	L	Aust.
Johnson, Powell	0.68	S	pastoral zone
& Dixon (1990)	0.37	S	wheat/sheep zone
	0.27	S	high rainfall zone
Harris & Shaw (1992)	-0.04	S	Aust.
	0.10	M	Aust.
	0.88	10-yr	Aust.
	2.99	L	Aust.
Kokic *et.al.* (1993)	0.05	S	pastoral zone
	0.15	S	wheat/sheep zone
	0.07	S	high rainfall zone
Coelli (1996)	0.27	L	WA wheat-sheep zone

Source: Griffith, *et al.* (1999b).

While the reviewed elasticity estimates are for the finished cattle, it is the supply elasticity at the weaner level that is required in the present model. The relationship between the supply elasticity at the weaner level and the supply elasticity at the finished cattle level depends on how the prices and quantities spread between the two levels. Assume that the price and quantity for finished cattle are v and Y, and for weaners w_1 and X_1. Also assume that the quantities at the two levels are proportional, ie. $Y=\alpha X_1$ where α is a constant-percentage conversion factor. This is a reasonable assumption as the average weaner weight and the cattle slaughtering weight should not be too different across different 'normal' years. Now the relationship between the two prices is critical. It can be shown that if we assume a proportional price difference between the two points, the supply elasticities will be the same, ie. $\varepsilon_Y=\varepsilon_{X1}$. However, if we assume there is a constant price mark up or the combination of the two, ie. $v=w_1+\Delta$ or $v=\lambda w_1+\Delta$, it can be shown that the elasticity changes according to the ratio of the two prices, ie. $\varepsilon_Y = (v/w_1)\varepsilon_{X1}$. Using this relationship, $\varepsilon_{X1} = (w_1/v)\varepsilon_Y = (1.12/0.55/2.24)\varepsilon_Y = 0.91\varepsilon_Y$. A value of 1 for ε_Y implies a value of 0.91 for ε_{X1}. In the base model, 0.9 is used for the weaner supply elasticity, i..e. $\varepsilon_{X1}=0.9$.

Feedgrain and "Other Inputs" Supplies

In addition to the cattle inputs, all sectors in the model involve other inputs, the supply elasticities of which are required. A supply elasticity of 0.8 for feedgrain is assumed based on a study of feedgrain supply in NSW (Campbell 1994).

There are few empirical estimates for the supply elasticity of 'other inputs' in the processing sector, or any other sectors in the model. Conventionally, it is believed that, since most of the other inputs such as labour and capital are not specialised, the supply of these inputs is highly elastic. In the base run, the supply elasticities for 'other inputs' in all sectors are assigned a value of 5.

5.3.3 Input Substitution Elasticities

The Allen-Uzawa elasticity of input substitution[4], as defined in Equation (4.5.4), is required for all pairs of inputs for all sectors. For the six industry sectors in the model, there are mainly two types of input substitution: (1) substitution between cattle/beef input and 'other inputs', and (2)

[4] For a discussion of this concept, see Blackorby and Russell (1989).

substitution between different types of cattle/beef inputs. In addition, substitution elasticities of feedgrain with cattle inputs and with 'other inputs' are also required.

There is very little empirical information on the substitutability between cattle inputs and other inputs. A conventional approach is to assume zero substitution elasticity implying fixed proportions between farm input and other marketing inputs. However, in the context of the EDM studies, allowing a small amount of input substitution could significantly change the estimated distribution of research benefits (Alston and Scobie 1983). As pointed out by Mullen, Wohlgenant and Farris (1988), one source of input substitution in beef processing has been technologies such as boxed beef that reduce shrinkage and spoilage. Also, greater input substitution is expected at the industry level than that at the firm level (Diewert 1981).

One set of estimates of the substitution elasticities between farm and marketing inputs was given by Wohlgenant (1989) for American farm products. His results showed a very high substitution elasticity value of 0.72 for the beef industry and values of 0.35, 0.11 and 0.25 for the pork, poultry and egg industries respectively. Another relevant study is by Ball and Chambers (1982) for the aggregated US meat products industry. It showed different signs for substitution between material input and other individual inputs such as capital, labour and energy (-0.64 to 0.33, Table 4).

Under some restrictive assumptions, Mullen, Wohlgenant and Farris (1988) estimated an output-constrained demand function for cattle, which gives estimates of the Allen input substitution elasticity between cattle and marketing inputs of 0.12 and 0.093, using different estimation methods. In many EDM studies on agricultural industries, the substitution elasticity between farm inputs and other inputs has been assumed to take a small value of around 0.1 (for example, Mullen, Wohlgenant and Farris 1988; Mullen, Alston and Wohlgenant 1989). An exception is the work by Wohlgenant (1993) which used the Wohgenant (1989) estimates of 0.72 and 0.35 for the beef and pork industries respectively.

In the base scenario of the model, the same value of 0.1 is assigned to all input substitution elasticities between cattle/beef inputs and 'other inputs' for all sectors. Extensive sensitivity analysis is carried out in Chapter 8 to study the impact when this parameter is of higher values. No empirical estimation is available for the substitutability between feedgrain and cattle, and between feedgrain and 'other inputs' for the cattle feedlot sector. A small value of 0.1 is also assigned to both parameters in the base run.

There is no information available on the input substitution elasticities between grainfed and grassfed cattle, or between cattle for export and cattle for domestic consumption. Existing studies have not disaggregated the industry to the required degree. For single output models, substitution between imported and domestic farm inputs has been assumed highly possible. Mullen, Alston and Wohlgenant (1989) surveyed some Australian and US empirical estimates of substitution elasticities between wool from different countries. They show rather low values ranging from 0.6 to 1.68. They used a value of 5 in their model, and they reported an estimate of 6.5 for this parameter in a preliminary study. In the computable equilibrium displacement (CGE) model of the Australian economy ORANI (Dixon, Parmenter, Sutton and Vincent 1997), a value of 2 is used for the domestic-imported substitution elasticities for commodities such as meat cattle, sheep, milk cattle and poultry.

However, while there is a high possibility of substitution between farm inputs from different sources (such as imported and domestic) in producing a single homogeneous retail product, the substitution possibility among different types of cattle inputs for the multi-output technologies in the current model is expected to be much smaller. In each of the feedlot, processing and marketing sectors, there is almost a one-to-one relationship between a specific input and a specific output. For example, in the processing sector, the four types of live cattle are combined with processing inputs to produce four types of beef carcass. As discussed in Chapter 4, the four cattle/beef types have distinct product specifications. Thus, there is a very small chance, for example, to process a heavy Japanese grainfed steer to sell as grassfed hamburger meat to the U.S.. Although there maybe substitution among the lower quality cuts such as mince or trimmed meat, given the multi-input and multi-output specification in this model, the possibility of such substitution is expected to be very small. In the base model, a small value of 0.05 is used for all 9 input substitution elasticities between different types of cattle/beef inputs in the feedlot, processing and marketing sectors.

5.3.4 Product Transformation Elasticities

There are even fewer empirical estimates available on product transformation elasticities, and no studies on transformation possibility between heterogenous beef products. Product transformation elasticities between various Australian agricultural products for the three agricultural zones, using common labour and capital inputs, are estimated by Vincent, Dixon and Powell (1980, Tables 2, 4 and 6) with a CRESH/CRETH production system. The estimated

transformation elasticities of cattle with wool, sheep and grain in this study are mostly in the range of –0.04 to –2.13. In the ORANI/Monash model, product transformation elasticities among agricultural products are all assumed the same value of 2 (Dixon, Parmenter, Sutton and Vincent 1997).

For the backgrounding and grass-finishing sectors in the current model specification, because the same weaner can be used to produce cattle for either export or domestic market, there is considerable flexibility for changing what product to produce according to relative prices. A value of 2 is used for both $\tau_{(Fnle,\ Fnld)}$ and $\tau_{(Ysc,\ Ysd)}$.

However, for the feedlot, processing and marketing sectors that use differentiated inputs to produce differentiated outputs, the product transformation elasticities are expected to be much smaller, just as input substitution between cattle/beef inputs was small. The product transformation elasticity measures the possibility of changing the product mix *for given inputs*. For example, in the case of the beef processing sector, once the amounts of the finished cattle for the four cattle input types are fixed, there are very limited possibilities for increasing a particular beef product because its price has risen. A small value of -0.05 is used for all 9 τ's for the feedlot, processing and marketing sectors.

All elasticity values specified for the base run are summarised in Table 5.4.

5.3.5 Concavity/Convexity Conditions

As discussed in Chapter 4 (Section 4.5), the elasticity values need to satisfy homogeneity, symmetry and concavity/convexity conditions to be integrable at the base equilibrium point. Most of the equality restrictions required by the homogeneity and symmetry conditions have been imposed explicitly in the displacement model in Equations (4.6.1)-(4.6.58). The symmetry condition for the two domestic demand elasticities and the second order inequality conditions of concavity/convexity are checked below for the specified elasticities.

It can be verified easily that the domestic and export beef demand elasticities ($\eta_{(Qi,\ pj)}$, $i, j = nd$, sd, and $\eta_{(Qne,\ pne)}$ and $\eta_{(Qse,\ pse)}$) in Table 5.4 satisfy conditions in Equations (4.5.10)-(4.5.12), which are necessary conditions for integrability at the base equilibrium point. Also, all exogenous factor supply elasticities (for weaners, feedgrain and 'other inputs') are positive, which is the only necessary condition (Equation (4.5.9)) required.

Table 5.4 Market Elasticity Values for the Base Run

Domestic Beef Demand Elasticities

$\eta_{(Qnd,\ pnd)} = -1.6$, $\eta_{(Qnd,\ psd)} = 1.0$,
$\eta_{(Qsd,\ pnd)} = 0.3$, $\eta_{(Qsd,\ psd)} = -1.1$.

Export Beef Demand Elasticities

$\eta_{(Qne,\ pne)} = -2.5$, $\eta_{(Qse,\ pse)} = -5$,

Input Substitution Elasticities

Backgrounding Sector

$\sigma_{(Xn1,\ Xn2)} = 0.1$,

Feedlot Sector

$\sigma_{(Fn1e,\ Fn1d)} = 0.05$, $\sigma_{(Fn1e,\ Fn2)} = 0.1$,
$\sigma_{(Fn1e,\ Fn3)} = 0.1$, $\sigma_{(Fn1d,\ Fn2)} = 0.1$,
$\sigma_{(Fn1d,\ Fn3)} = 0.1$, $\sigma_{(Fn2,\ Fn3)} = 0.1$,

Grass-Finishing Sector

$\sigma_{(Xs1,\ Xs2)} = 0.1$,

Processing Sector

$\sigma_{(Yne,\ Ynd)} = 0.05$ $\sigma_{(Yne,\ Yse)} = 0.05$,
$\sigma_{(Yne,\ Ysd)} = 0.05$, $\sigma_{(Ynd,\ Yse)} = 0.05$,
$\sigma_{(Ynd,\ Ysd)} = 0.05$, $\sigma_{(Yse,\ Ysd)} = 0.05$,
$\sigma_{(Yne,\ Yp)} = 0.1$, $\sigma_{(Ynd,\ Yp)} = 0.1$,
$\sigma_{(Yse,\ Yp)} = 0.1$, $\sigma_{(Ysd,\ Yp)} = 0.1$.

Export Marketing Sector

$\sigma_{(Zne,\ Zse)} = 0.05$, $\sigma_{(Zne,\ Zme)} = 0.1$
$\sigma_{(Zse,\ Zme)} = 0.1$

Domestic Marketing Sector

$\sigma_{(Znd,\ Zsd)} = 0.05$, $\sigma_{(Znd,\ Zmd)} = 0.1$,
$\sigma_{(Zsd,\ Zmd)} = 0.1$,

Weaner Supply Elasticity

$\varepsilon_{(X1,\ w1)} = 0.9$,

Feedgrain Supply Elasticity

$\varepsilon_{(Fn2,\ sn2)} = 0.8$,

Other Factor Supply Elasticities

$\varepsilon_{(Xn2,\ wn2)} = 5$, $\varepsilon_{(Xs2,\ ws2)} = 5$,
$\varepsilon_{(Fn3,\ sn3)} = 5$, $\varepsilon_{(Yp,\ vp)} = 5$,
$\varepsilon_{(Zme,\ ume)} = 5$, $\varepsilon_{(Zmd,\ umd)} = 5$.

Product Transformation Elasticities

Backgrounding Sector

$\tau_{(Fn1e,\ Fn1d)} = -2$,

Feedlot Sector

$\tau_{(Yne,\ Ynd)} = -0.05$,

Grass-Finishing Sector

$\tau_{(Yse,\ Ysd)} = -2$

Processing Sector

$\tau_{(Yne,\ Yse)} = -0.05$, $\tau_{(Zne,\ Znd)} = -0.05$,
$\tau_{(Zne,\ Zsd)} = -0.05$, $\tau_{(Zse,\ Znd)} = -0.05$,
$\tau_{(Zse,\ Zsd)} = -0.05$, $\tau_{(Znd,\ Zsd)} = -0.05$.

Export Marketing Sector

$\tau_{(Qne,\ Qse)} = -0.05$,

Domestic Marketing Sector

$\tau_{(Qnd,\ Qsd)} = -0.05$.

All input substitution elasticities need to satisfy the concavity condition in Equation (4.5.3)'. The inequality condition requires that the principal minors of the input substitution elasticity matrix H_σ have alternate signs; that is, the first principal minor is nonpositive, the second principal minor is nonnegative, and so on. It can be shown that, when only two or three inputs are involved in a production technology and when the homogeneity and symmetry conditions in (4.5.1)' and (4.5.2)' are satisfied, nonnegative substitution elasticities ($\sigma_{ij} \geq 0$, i, j =1, 2, 3; i<j) will guarantee the satisfaction of the concavity condition in Equation (4.5.3). All input substitution elasticities in Table 5.4 are nonnegative. As a result, the concavity condition is satisfied for backgrounding, grass-finishing, export marketing and domestic marketing sectors, which have less than four inputs.

Four inputs are involved in the feedlot sector. Using the subscripts 1 to 4 for simplification, the four cost shares are κ_1=0.35, κ_2=0.26, κ_3=0.28, κ_4=0.11, and, from Table 5.4, σ_{12}=0.05 and all the rest σ_{ij}=0.1 (i<j, (i,j) $\neq$(1,2)). Using the homogeneity condition in Equation (4.5.1)', the first three diagonal elements of the substitution elasticity matrix are

$$\sigma_{11} = -(\kappa_2\sigma_{12} + \kappa_3\sigma_{13} + \kappa_4\sigma_{14})/\kappa_1 = -0.15,$$

$$\sigma_{22} = -(\kappa_1\sigma_{12} + \kappa_3\sigma_{23} + \kappa_4\sigma_{24})/\kappa_2 = -0.22,$$

$$\sigma_{33} = -(\kappa_1\sigma_{13} + \kappa_2\sigma_{23} + \kappa_4\sigma_{34})/\kappa_3 = -0.26.$$

The substitution elasticity matrix becomes

$$H_\sigma = \begin{pmatrix} -0.15 & 0.05 & 0.1 & 0.1 \\ 0.05 & -0.22 & 0.1 & 0.1 \\ 0.1 & 0.1 & -0.26 & 0.1 \\ 0.1 & 0.1 & 0.1 & \sigma_{44} \end{pmatrix}$$

The three principal minors of H_σ are

$$H_{\sigma 1} = -0.15 \leq 0, \qquad H_{\sigma 2} = 0.03 \geq 0, \qquad \text{and} \qquad H_{\sigma 3} = -0.003 \leq 0,$$

while, from the discussion of Equation (4.5.3)' in Section 4.5.2, $H_{\sigma 4} = 0$. Thus the concavity condition is satisfied for the input substitution elasticities for the feedlot sector.

Similarly, for the processing sector that involves 5 inputs, it is checked that the concavity condition in Equation (4.5.3)' is satisfied for the substitution elasticity values in Table 5.4 and the cost shares in Table 5.1. Details of the verification are similar to that of the feedlot sector.

Similarly, all product transformation elasticities for all sectors need to satisfy the convexity condition in Equation (4.5.8)', ie. all principal minors of the matrix of transformation elasticities H_τ are non-negative. Again, for the transformation elasticities in Table 5.4 and the base revenue shares in Table 5.1, Equation (4.5.8)' is satisfied for all six industry sectors. Details of the verification are omitted to save space.

5.4 Exogenous Shifter Variables

There are 12 exogenous shifter variables in the model that shift the relevant demand or supply curves. These allow alternative scenarios resulting from research and promotion investments into different industry sectors and markets.

As stated in Chapter 1, the focus of this thesis is on evaluation and comparison of broad categories of research-induced technologies and promotions to address policy issues. Consequently, the study concentrates on equal 1% vertical shifts of the relevant supply or demand curves that result from alternative investment scenarios. In other words, the comparison is among the impacts of the same 1% reductions in per unit costs at various production sectors and the same 1% increases in consumer's 'willingness to pay' in various markets. The costs involved in the R&D or promotion programs that bring about these 1% shifts are not studied.

The 12 scenarios and the values of exogenous variables for these scenarios are specified in Table 5.5.

Table 5.5 Exogenous Shift Variables for Various Investment Scenarios

Scenario 1. Weaner Production Research:

t_{X1} = **-0.01**, rest $t_{(.)} = 0$ and $n_{(.)} = 0$.

Cost reduction in weaner production resulting from any breeding or farm technologies that reduce the cost of producing weaners.

Scenario 2: Grass-Finishing Research

t_{Xs2} = **-0.01**, rest $t_{(.)} = 0$ and $n_{(.)} = 0$.

Other cost reductions in the grass-finishing sector resulting from any farm technologies or new management strategies that increase the productivity of 'other inputs'. This also includes nutritional technologies in grain supplementing cattle, because cattle topped up on pasture are modelled as part of the grass-finishing sector.

Scenario 3: Backgrounding Research

t_{Xn2} = **-0.01**, rest $t_{(.)} = 0$ and $n_{(.)} = 0$.

Other cost reductions in the backgrounding sector resulting from new backgrounding technologies.

Scenario 4: Feedgrain Industry Research

t_{Fn2} = **-0.01**, rest $t_{(.)} = 0$ and $n_{(.)} = 0$.

Cost reductions in the feedgrain production resulting from research and technical changes in the grain industry.

Scenario 5: Feedlot Research

t_{Fn3} = **-0.01**, rest $t_{(.)} = 0$ and $n_{(.)} = 0$.

Other cost reductions in the feedlot sector due to research into areas such as feedlot nutrition and management.

Scenario 6: Processing Research

t_{Yp} = **-0.01**, rest $t_{(.)} = 0$ and $n_{(.)} = 0$.

Other cost reductions in the beef processing due to new technologies or management strategies in the processing sector.

Scenario 7: Domestic Marketing Research

t_{Zmd} = **-0.01**, rest $t_{(.)} = 0$ and $n_{(.)} = 0$.

Other cost reductions in the domestic marketing and retailing sector resulting from research-induced technologies and improved management.

Scenario 8: Export Marketing Research

t_{Zme} = **-0.01**, rest $t_{(.)} = 0$ and $n_{(.)} = 0$.

Other cost reductions in export marketing due to research investments that increase export marketing efficiency.

Scenario 9: Export-Grainfed Beef Promotion

n_{Qne} = **0.01**, rest $t_{(.)} = 0$ and $n_{(.)} = 0$.

Increase in the 'willingness to pay' by the export-grainfed beef consumers due to beef promotion or changes in taste in the overseas market.

Scenario 10: Export-Grassfed Beef Promotion

n_{Qse} = **0.01**, rest $t_{(.)} = 0$ and $n_{(.)} = 0$.

Increase in the 'willingness to pay' by export-grassfed beef consumers due to beef promotion or changes in taste in the overseas market.

Scenario 11: Domestic-Grainfed Beef Promotion

n_{Qnd} = **0.01**, rest $t_{(.)} = 0$ and $n_{(.)} = 0$.

Increase in the 'willingness to pay' by domestic-grainfed beef consumers due to beef promotion or changes in taste in the domestic market.

Scenario 12: Domestic-Grainfed Beef Promotion

n_{Qsd} = **0.01**, rest $t_{(.)} = 0$ and $n_{(.)} = 0$.

Increase in the 'willingness to pay' by domestic-grassfed beef consumers due to beef promotion or changes in taste in the domestic market.

5.5 Summary

To solve the equilibrium displacement model specified in Chapter 4, base prices and quantities for all inputs and outputs, market parameters and values for exogenous shifters need to be defined. In this chapter, considerable effort has been devoted to compile these data and parameters.

A set of equilibrium prices and quantities for inputs and outputs of all sectors in the model has been compiled in Table 5.1, representing an average industry situation over 1992-1997. Data on disaggregated beef types at individual production levels are not often readily available. Information was sought from various sources such as AFFA, ABARE, MRC (former), NLRS, The Land newspaper, and various MRC and AMLC (former) commissioned research and surveys. This enabled the specification of a set of equilibrium price and quantity values for grain/grass and export/domestic beef at the levels of weaner cattle, feeder cattle, finished cattle, processed beef carcass and final beef products. Input cost shares and product revenue shares for all sectors as required in the model were calculated accordingly using these prices and quantities. Some tedious and time consuming work was required and is documented in Appendix 3. The results provide valuable information for disaggregated modelling of the beef industry.

Required market elasticities have been specified in Table 5.4. Existing empirical estimates were reviewed. Where published estimates were limited, substantial subjective judgement was required to choose the set of 'most likely' elasticity values for the base run. Sensitivity of the model results to changes in these elasticity values will be studied systematically using a stochastic approach in Chapter 8.

Finally, equal 1% shifts in the relevant demand and supply curves were assumed for the 12 exogenous change scenarios, and the exogenous variables were specified accordingly in Table 5.5.

Using the information specified in Tables 5.1, 5.4 and 5.5, the equilibrium displacement model specified in Chapter 4 can be solved for any one of the 12 investment scenarios to obtain the

changes in prices and quantities in all sectors. These price and quantity changes are used in the later chapters to estimate the resulting welfare changes.

Chapter 6. Measuring Economic Surplus Changes

6.1 Introduction

So far, the displacement model involving 58 price and quantity variables has been specified in Chapter 4, and the integrability restrictions have been imposed among parameters at the base equilibrium point. Data required for the base equilibrium prices and quantities, market elasticities and exogenous variables for the 12 scenarios have been specified in Chapter 5. Using these data, the displacement model in Equations (4.6.1)-(4.6.58) can be solved to obtain the changes in all prices and quantities for each policy scenario. The ultimate aim of the study is to use these price and quantity changes to estimate the economic welfare implications for the various industry groups.

As discussed in 2.5.3, the arguments of Willig (1976) and Alston and Larson (1993) are accepted in this study, and changes in the economic surplus areas measured off Marshallian demand and supply curves are used as measures of welfare changes. In line with the empirical results of Hausman (1981) for single market models and LaFrance (1991) for multi-market case, and also implied by the derivation in this chapter below, as only small shifts are considered in the study and as it is the *trapezoid* area of welfare change rather than the *triangular* 'deadweight loss' that is of interest in this study, the errors from using economic surplus changes to approximate changes in Hicksian welfare measures are expected to be small.

The economic surplus changes to the various industry groups for the 12 policy scenarios are examined in this chapter. For each scenario where an exogenous demand or supply shift occurs in a market, demand and supply curves in other markets in the model may be shifted endogenously. As a result, all prices and quantities in the model are changed. Thurman (1991a) pointed out that complications may arise in the measure of welfare when there are more than two sources of general equilibrium feedback, or when both demand and supply curves are shifted endogenously. The welfare measures are relatively straightforward when there is no induced shift in one of the supply and demand curves in a market.

In this chapter, the relationship between the analytical welfare integrals and the conventional "off-the-curve" economic surplus areas is examined. This is done through examining the profit and expenditure functions for these industry groups in the context of the current model.

Eleven industry groups comprising exogenous factor suppliers and final beef consumers are identified in the model. Only a single price change is involved in each of the profit or expenditure functions of ten of the industry groups. As shown in Equation (4.3.28) in Chapter 4, for each of the eight exogenous factor supplier groups, the profit function does not relate to any variables in the model other than own price. Thus, the supply functions for these factors are determined completely exogenously and do not shift as a result of any other exogenous shocks considered in the model. Similarly, the demand curves for the two export beef products are also assumed unrelated to any other variables in the model other than own prices. There is only a single source of equilibrium feedback in these markets. Hence for these ten producer and consumer groups, the conventional economic surplus areas measured off the ordinary supply or demand curves are used as welfare measures for the relevant groups. According to the results in Willig (1976) and Hausman (1981) for a single market situation, the trapezoid areas of economic surplus changes are good approximations of the Hicksian welfare changes. The welfare implications for these ten industry groups in the 12 investment scenarios are discussed in details in 6.2 and 6.3 respectively.

However, the two domestic beef products are related in both demand and supply, and both demand and supply curves shift endogenously as a result. This is the case that Thurman (1991a) identified as having two sources of equilibrium feedback, and called for extra caution when measuring welfare effects. The measures of economic surplus changes for the domestic consumers are discussed in 6.4. Two alternative approaches are investigated: measuring through the total welfare change off the general equilibrium curves in a single market or measuring directly off the partial equilibrium curves in individual markets. In this case, the domestic consumers' expenditure function involves two price changes. However, based on the empirical results in LaFrance (1991), as long as the shifts considered are small, the trapezoid shaped areas of economic surplus changes are still good approximations to the exact compensating or equivalent variation measures.

A brief summary is given in 6.5.

6.2 Producer Surplus Changes for Exogenous Factor Suppliers

In the displacement model specified in Chapter 4, factor supplies of X_1, X_{n2}, X_{s2}, F_{n2}, F_{n3}, Y_p, Z_{me} and Z_{md} (defined in Table 4.3) are not related to any other variables within the model other

than own prices. For each of the 12 scenarios described in Table 5.5, when an exogenous shock occurs in one of the markets in the model, the demand curves in these factor markets are shifted endogenously through its demand interaction with other markets in the model, which induces changes in the prices and quantities of these factors. However, the supply curves of these factors do not shift endogenously. As a result, the producer surplus areas measured off these supply curves represent the benefit to the producers of the relevant factors.

Take the welfare change to the weaner (X_1) producers as an example. Following the specification in Chapter 4 (Section 4.3.2), assume that the profit function for the weaner producer is $\pi(w_1, W)$, where w_1 is the price of X_1 and W is the vector of other prices affecting the profit function which are exogenous to the model. Consequently, W is assumed constant during the displacement. Now consider separately the scenario when the supply of weaners is exogenously shifted (Scenario 1) and the scenarios when the initial shifts occur in other markets (Scenarios 2 to 12).

In scenario 1, suppose that the per unit cost of producing weaners is reduced by $|K|$ for all output levels ($K<0$ is a constant, i.e. parallel shift). Consequently, the profit function is shifted from $\pi(w_1, W)$ to $\pi(w_1-K, W)$ and the supply curve from $S(w_1, W)$ to $S(w_1-K, W)$. As the variable W is assumed unaffected by the shift, it is omitted in the supply functions below without losing generality. In the first instance, the initial downward shift in weaner supply reduces the equilibrium price of weaners. The decrease in the weaner price then induces shifts in other markets and changes other prices and quantities in the model. As a feedback effect of these other price and quantity changes, the demand curve of weaners is also shifted up endogenously. A new set of equilibrium prices and quantities are reached eventually in all markets. Suppose the initial price and the new price for weaners are $w_1^{(1)}$ and $w_1^{(2)}$ respectively. The change in weaner producers' welfare is the change in their profit before and after the displacement:

$$\begin{aligned}\Delta\pi &= \pi(w_1 - K)\big|_{w_1=w_1^{(2)}} - \pi(w_1)\big|_{w_1=w_1^{(1)}} = \pi(w_1^{(2)} - K) - \pi(w_1^{(1)}) \\ &= \int_{w_1^{(1)}}^{w_1^{(2)}-K} \frac{\partial\pi(w_1)}{\partial w_1}\,\mathrm{d}w_1 = \int_{w_1^{(1)}}^{w_1^{(2)}-K} S(w_1)\,\mathrm{d}w_1 = \int_{w_1^{(1)}+K}^{w_1^{(2)}} S(w_1 - K)dw_1.\end{aligned} \tag{6.1}$$

The last expression relates to the producer surplus area measured off the new supply curve $S(w_1\text{-}K)$. This is illustrated in Figure 6.1. The dotted trapezoid area $ABCE^{(2)}$ is the producer surplus change given by the last integral above.

If the amount of shift K is represented as a percentage of initial price $w_1^{(1)}$, ie. $t_{x1} = K/w_1^{(1)}$, and the proportional changes in price and quantity are represented as $Ew_1=(w_1^{(2)}- w_1^{(1)})/ w_1^{(1)}$ and $EX_1=(X_1^{(2)}-X_1^{(1)})/X_1^{(1)}$, respectively, it can be shown easily that the producer welfare change to the weaner producers, i.e. the last integral in Equation (6.1) given by area $ABCE^{(2)}$, can be calculated as

(6.2) $$\Delta PS_{X1} = w_1^{(1)}X_1^{(1)}(Ew_1-t_{X1})(1+0.5EX_1) \qquad \textit{weaner producers}$$

Similarly, for any one of the other eleven scenarios (Scenario 2 to 12), the initial shift in another market in the model induces a shift in the demand curve of weaners and thus changes the equilibrium price and quantity of weaners. The supply curve is not affected. In other words, the weaner producer's profit function $\pi(w_1)$ and the derived supply function $S(w_1)$ remain the same before and after the shift. The producers' welfare change is given by the change in their profit

$$\Delta\pi = \pi(w_1^{(2)}) - \pi(w_1^{(1)}) = \int_{w_1^{(1)}}^{w_1^{(2)}} \frac{\partial\pi(w_1)}{\partial w_1} dw_1 = \int_{w_1^{(1)}}^{w_1^{(2)}} S(w_1) dw_1,$$

which is the integral measured off the fixed supply curve. This is shown in Figure 6.2. The welfare change to the weaner producers is given by the trapezoid area $ABE^{(2)}E^{(1)}$. This area can be calculated using the percentage price and quantity changes as

$$\Delta PS_{X1} = w_1^{(1)}X_1^{(1)}Ew_1(1+0.5EX_1).$$

In summary, for all the twelve scenarios, the changes in weaner producer's welfare is given by Equation (6.2). For scenario 1, t_{x1}=-0.01, and for other scenarios, t_{x1}=0.

The producer welfare changes for all other exogenous factor suppliers (i.e. the backgrounders, grass-finishers, grain producers, feedlotters, processors, exporters and domestic retailers) can be derived similarly. The formulas for all producer surplus changes for all twelve scenarios are summarised in Table 6.1.

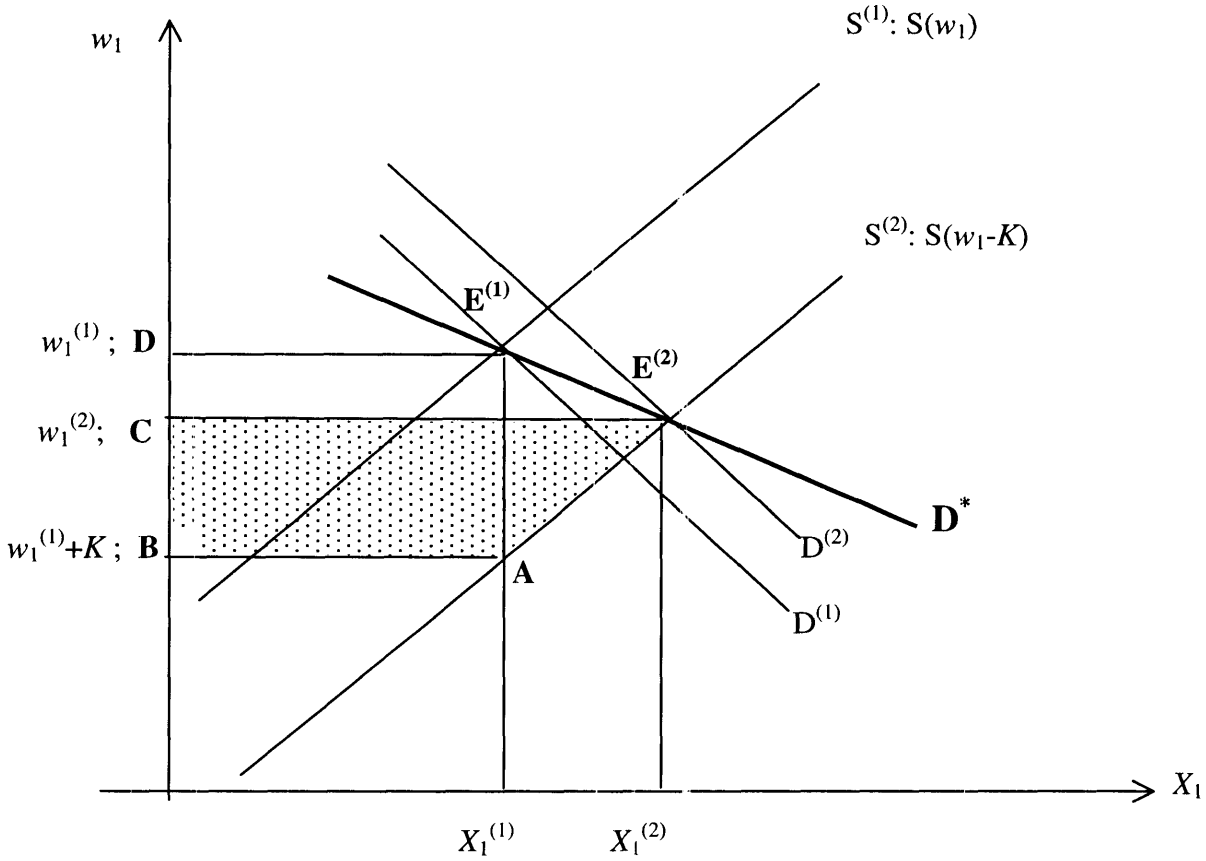

Figure 6.1 Weaner Producers' and Total Surplus Changes for Scenario 1 (t_{X1}=-1%)

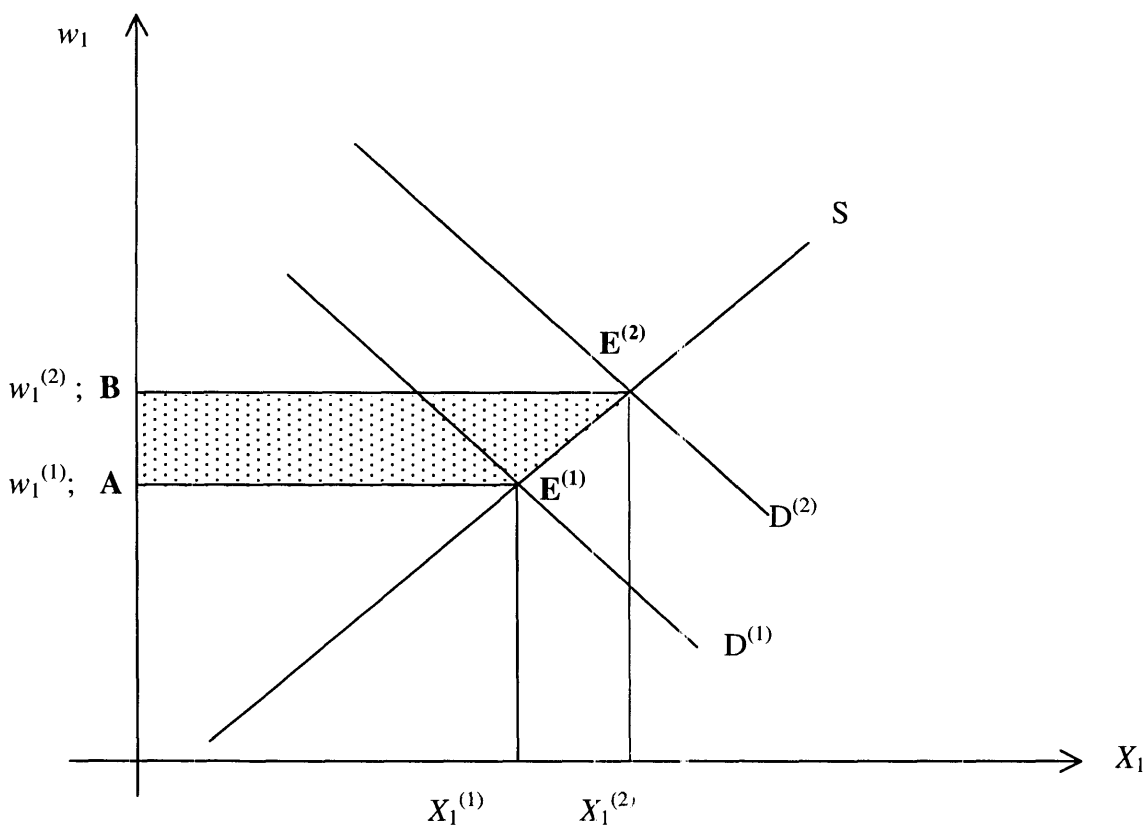

Figure 6.2 Weaner Producers' Surplus Change for Scenarios 2 to 12

Table 6.1 Formulas of Factor Producer Surplus Changes and Export Consumer Surplus Changes for All 12 Scenarios

Weaner Producers	$\Delta PS_{X1} = w_1^{(1)} X_1^{(1)} (\mathrm{E}w_1 - t_{X1})(1+0.5\mathrm{E}X_1)$
Backgrounders	$\Delta PS_{Xn2} = w_{n2}^{(1)} X_{n2}^{(1)} (\mathrm{E}w_{n2} - t_{Xn2})(1+0.5\mathrm{E}X_{n2})$
Grass-finishers	$\Delta PS_{Xs2} = w_{s2}^{(1)} X_{s2}^{(1)} (\mathrm{E}w_{s2} - t_{Xs2})(1+0.5\mathrm{E}X_{s2})$
Grain Producers	$\Delta PS_{Fn2} = s_{n2}^{(1)} F_{n2}^{(1)} (\mathrm{E}s_{n2} - t_{Fn2})(1+0.5\mathrm{E}F_{n2})$
Feedlotters	$\Delta PS_{Fn3} = s_{n3}^{(1)} F_{n3}^{(1)} (\mathrm{E}s_{n3} - \mathrm{t}_{Fn3})(1+0.5\mathrm{E}F_{n3})$
Processors	$\Delta PS_{Yp} = v_p^{(1)} Y_p^{(1)} (\mathrm{E}v_p - t_{Yp})(1+0.5\mathrm{E}Y_p)$
Exporters	$\Delta PS_{Zme} = u_{me}^{(1)} Z_{me}^{(1)} (\mathrm{E}u_{me} - t_{Zme})(1+0.5\mathrm{E}Z_{me})$
Domestic Retailers	$\Delta PS_{Zmd} = u_{md}^{(1)} Z_{md}^{(1)} (\mathrm{E}u_{md} - t_{Zmd})(1+0.5\mathrm{E}Z_{md})$
Export Grainfed Beef Consumers	$\Delta CS_{Qne} = p_{ne}^{(1)} Q_{ne}^{(1)} (n_{Qne} - \mathrm{E}p_{ne})(1+0.5\mathrm{E}Q_{ne})$
Export Grassfed Beef Consumers	$\Delta CS_{Qse} = p_{se}^{(1)} Q_{se}^{(1)} (n_{Qse} - \mathrm{E}p_{se})(1+0.5\mathrm{E}Q_{se})$
Sum (of above ten groups)	$\Delta ES_{rest(Qd)} = \sum_{\substack{i=X_1, X_{n2}, X_{s2}, \\ F_{n2}, F_{n3}, Y_p, Z_{me}, Z_{md}}} \Delta PS_i + \sum_{i=Q_{ne}, Q_{se}} \Delta CS_i,$

6.3 Consumer Surplus Changes for Export Consumers

In the model specification, the demand functions for the two export beef products (Q_{ne} and Q_{se}), in Equations (4.6.57) and (4.6.58) in Chapter 4, are assumed unrelated to each other and to any other variables in the model other than own prices. Consequently, the demand curves for these two products are completely exogenous. As shown below, the economic surplus changes measured off the demand curves can be used as measures of welfare changes to the respective export consumers.

Consider the demand for export grainfed beef Q_{ne}. Assume that the minimum expenditure necessary to achieve the initial utility level $u^{(1)}$ is given by the expenditure function $e(p_{ne}, P, u^{(1)})$, where P is the price vector for all other commodities the consumer also consumes. P is assumed exogenous and constant for all exogenous shift scenarios. Now consider the scenario when the demand for Q_{ne} is shifted up (Scenario 9 when n_{Qne}=1%). Assume that a promotional campaign has increased the consumer's willingness to pay per unit of export grainfed beef by K

(K>0). As a result, the expenditure function shifts from e(p_{ne}, P, $u^{(1)}$) to e(p_{ne}-K, P, $u^{(1)}$) and the derived Hicksian demand from $D^h(p_{ne}, P, u^{(1)})$ to $D^h(p_{ne}-K, P, u^{(1)})$. The price change induced by this initial demand shift will result in shifts in other markets and changes in other prices and quantities. The supply of Q_{ne} will also be shifted endogenously as a feedback effect.

Let $p_{ne}^{(1)}$ and $p_{ne}^{(2)}$ be the initial and new prices and $Q_{ne}^{(1)}$ and $Q_{ne}^{(2)}$ be the initial and new quantities. Again, P and $u^{(1)}$ are omitted from the expressions for simplicity. The *compensating variation* is the change in income that is necessary to compensate the consumer in order to maintain the original utility level $u^{(1)}$ (if e(.) is defined as relating to the *new* utility level after the change, it will be called *equivalent variation*). The welfare gain for the export grainfed beef consumers can be represented as the negative of the *compensating variation* as

$$-\Delta e = -\left(e(p_{ne}-K)\big|_{p_{ne}=p_{ne}^{(2)}} - e(p_{ne})\big|_{p_{ne}=p_{ne}^{(1)}} \right) = e(p_{ne}^{(1)}) - e(p_{ne}^{(2)}-K)$$
$$= \int_{p_{ne}^{(2)}-K}^{p_{ne}^{(1)}} \frac{\partial}{\partial p_{ne}} e(p_{ne})dp_{ne} = \int_{p_{ne}^{(2)}-K}^{p_{ne}^{(1)}} D^h(p_{ne})dp_{ne} = \int_{p_{ne}^{(2)}}^{p_{ne}^{(1)}+K} D^h(p_{ne}-K)dp_{ne}$$

This last expression represent the welfare change measured off the shifted Hicksian demand curve. As discussed earlier, welfare measures off the Marshallian curves are used in this study to approximate the exact Hicksian measures. Based on the results in Willig (1976), Hausman (1981) and Alston and Larson (1993), the exact measure suggested by Hausman (1981) is not pursued and the errors in using the Marshallian measures are expected to be small. Using the observable Marshallian demand curve D(.) in the above expression, the consumers' welfare gain to the export grainfed beef consumers is given by

(6.3) $$\Delta CS_{Qne} = \int_{p_{ne}^{(2)}}^{p_{ne}^{(1)}+K} D(p_{ne}-K)dp_{ne}.$$

In Figure 6.3, the above integral relates to the trapezoid area ABCE$^{(2)}$. Letting n_{Qne}=$K/p_{ne}^{(1)}$ be the initial percentage shift in Q_{ne} demand and E(.) be the percentage change of variable (.) before and after the equilibrium displacement, it can be shown that this area can be calculated as

(6.4) $$\Delta CS_{Qne} = p_{ne}^{(1)}Q_{ne}^{(1)}(n_{Qne}-\mathrm{E}p_{ne})(1+0.5\mathrm{E}Q_{ne}) \quad \textit{export grainfed consumers}$$

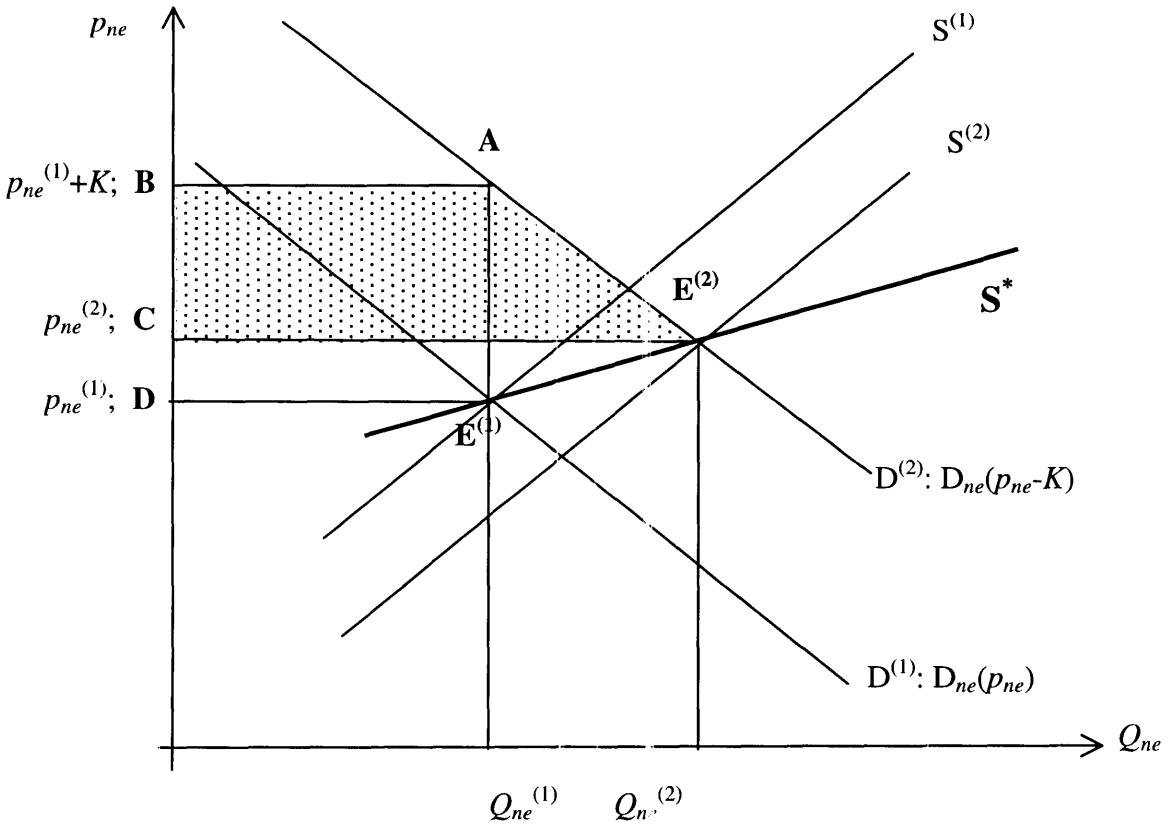

Figure 6.3 Export Grainfed Beef Consumers' and Total Surplus Changes for Scenario 9 (n_{Qne}=1%)

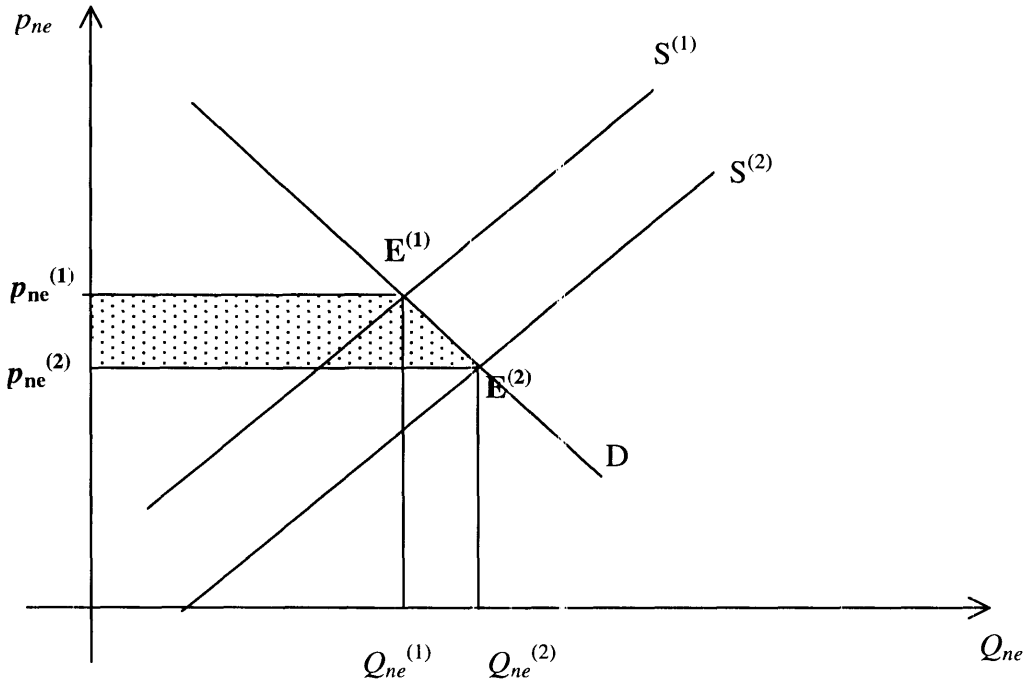

Figure 6.4 Export grainfed Beef Consumers' Surplus Change for Scenarios 2 to 12

It can be shown similarly that for all other 11 scenarios, when an initial shift occurs in another market in the model, the above equation is still correct with n_{Qne}=0. This is illustrated in Figure 6.4 with area of $P_{ne}^{(2)}E^{(2)}E^{(1)}P_{ne}^{(1)}$. Thus Equation (6.4) is a measure for economic surplus change for export grainfed consumers for all twelve scenarios.

Similarly, the welfare change for the export grassfed beef consumers for all scenarios can be derived as

(6.5) $$\Delta CS_{Qse} = p_{se}^{(1)}Q_{se}^{(1)}(n_{Qse}\text{-}Ep_{se})(1+0.5EQ_{se})$$ *export grassfed consumers*

They are also summarised in Table 6.1.

6.4 Domestic Consumers' Welfare Changes

As shown above, because all factor supplies and export beef demands are determined completely exogenously, the welfare changes to the factor suppliers and export consumers can be measured straightforwardly. However, as the two domestic beef products are related in both demand and supply, the welfare measure for the domestic consumers is not as straightforward. This is the case Thurman (1991a) referred to as having more than two sources of feedback. In this situation, both demand and supply curves in the two markets are shifted endogenously.

For most domestic consumers, grassfed and grainfed beef are close substitutes. Hence it makes sense to think of welfare changes of a consumer who consumes both products rather than to attempt to identify separate welfare effects from the consumption of grainfed and grassfed beef. This can be done by estimating the welfare change to domestic consumers, (ΔCS_{Qd}), from a single expenditure function where the prices of both beef products are arguments.

In the following, the welfare implication to the domestic consumers (ΔCS_{Qd}) is discussed separately for the scenarios when the initial shocks occur in the domestic beef markets themselves (Scenarios 11 and 12) and in other markets (Scenarios 1 to 10).

6.4.1 Scenarios 1 to 10 – Two Alternative Approaches

As reviewed in Section 2.5.4, it is well-known (Just, Hueth and Schmitz 1982, p469; Alston, Norton and Pardey 1995, p232) that, when integrability conditions are met, there are two ways of calculating the general equilibrium (GE) welfare effects: measuring the total welfare change off the *general* equilibrium curves in the single market where the initial shift occurs, or measuring the individual welfare effects off the partial equilibrium curves in individual markets and adding up. As argued in Section 4.5, because the integrability restrictions have been imposed at the base equilibrium point, the two ways of measuring should give the same results.

A. Measuring through ΔTS from GE Curves in a Single Market

For Scenarios 1 to 10 as specified in Table 5.5, the initial shift occurs in a demand or supply curve that is completely exogenous to the model system. In these cases, the GE demand curves in all factor markets and the GE supply curves in the two export beef markets are easily identified. The total welfare changes (ΔTS) can be measured through the GE curve in the single market that involves the exogenous shift. The benefits to the domestic consumers can be obtained as the difference between ΔTS and the sum of benefits to the other ten industry groups ($\Delta ES_{\text{rest}(Qd)}$) calculated from formulas in Table 6.1.

Take weaner production research (Scenario 1) for example, where the weaner supply curve is exogenously shifted down by 1% (t_{X1}=-0.01). Based on Just, Hueth and Schmitz (1982) and Thurman[1] (1991b), the total welfare gain to the 'whole society' (ΔTS) can be measured in the X_1 market alone. In particular, ΔTS is the sum of the producer surplus change measured off the exogenously determined supply curve of X_1 and the consumer surplus change measured off the *general equilibrium* demand curve of X_1.

Figure 6.1 illustrates the X_1 market for Scenario 1. As discussed in Section 6.2.1, the producer surplus change to weaner producers is given by area ABCE$^{(2)}$ and Equation (6.2). The partial equilibrium (or *conditional*) demand curve for X_1 has been shifted up endogenously from D$^{(1)}$: D(w_1| $P^{(1)}$) to D$^{(2)}$: D(w_1| $P^{(2)}$), where $P^{(1)}$ and $P^{(2)}$ are the levels of all other prices in the model before and after the equilibrium displacement. E$^{(1)}$ and E$^{(2)}$ are the old and new equilibrium points. The line connecting E$^{(1)}$ and E$^{(2)}$, denoted D*, is the general equilibrium demand curve

for X_1 that traces the demand-price relationship for different levels of t_{X1} and P. The change in consumer surplus area measured off D^* is given by

$$\Delta CS^*_{X1} = \int_{w_1^{(1)}}^{w_1^{(2)}} D^*(w_1)dw_1 = Area(CDE^{(1)}E^{(2)}) \tag{6.6}$$
$$= -w_1^{(1)} X_1^{(1)} \mathrm{E}w_1 (1 + 0.5\mathrm{E}X_1).$$

In this case, $\Delta CS_{X1}{}^*$ measures the benefits to all other factor suppliers and all downstream industry sectors that directly or indirectly consume weaners. Using the expression for $\Delta \mathrm{PS}_{X1}$ in Equation (6.1), the total welfare change for Scenario 1 is given by

$$\Delta TS = \Delta PS_{X1} + \Delta CS^*_{X1} = Area(ABDE^{(1)}E^{(2)})$$
$$= \int_{w_1^{(1)}+K}^{w_1^{(2)}} S(w_1 - K)dw_1 + \int_{w_1^{(1)}}^{w_1^{(2)}} D^*(w_1)dw_1$$
$$= w_1^{(1)} X_1^{(1)} (Ew_1 - t_{X1})(1 + 0.5EX_1) - w_1^{(1)} X_1^{(1)} Ew_1 (1 + 0.5EX_1) \tag{6.7}$$
$$= -w_1^{(1)} X_1^{(1)} t_{X1} (1 + 0.5EX_1).$$

Thus, the benefit to domestic consumers can be obtained as the residual as

$$\Delta CS_{Qd} = \Delta TS - \Delta ES_{rest(Qd)}, \quad \text{where} \tag{6.8}$$

$$\Delta ES_{rest(Qd)} = \sum_{\substack{i=X_1, X_{n2}, X_{s2}, \\ F_{n2}, F_{n3}, Y_p, Z_{me}, Z_{md}}} \Delta PS_i + \sum_{i=Q_{ne}, Q_{se}} \Delta CS_i, \tag{6.9}$$

where ΔPS_i ($i = X_{n2}, X_{s2}, F_{n2}, F_{n3}, Y_p, Z_{me}$ and Z_{md}) and ΔCS_i ($i = Q_{ne}$ and Q_{se}) are the surplus changes to the other ten industry groups, given by formulas in Table 6.1.

The welfare changes for domestic consumers for Scenarios 2 to 10 can be obtained similarly. The formulas for calculating ΔCS_{Qd} through the total welfare changes (ΔTS) off the GE curves in the exogenously shifted markets for Scenarios 1 to 10 are summarised in the left column of Table 6.2. The sum of the surplus changes for the other ten groups, $\Delta ES_{\mathrm{rest}(Qd)}$, is given in Table 6.1.

[1] The derivation of this result via integrals is given in Thurman (1991a, p2-7), for the case when the two products are related in demand but not in supply, and is not repeated here.

Table 6.2 Economic Surplus Changes for Domestic Consumers for all 12 Scenarios – Two Alternative Approaches

A. Via GE Curves in the Exogenously Shifted Market	**B. Directly from the PE Curves in the Domestic Beef Markets**
$\Delta CS_{Qd} = \Delta TS - \Delta ES_{rest(Qd)}$ where $\Delta ES_{rest(Qd)}$ is given in Table 6.1 and ΔTS is given below. **Scenario 1 (t_{X1}=-0.01):** $\Delta TS = \Delta PS_{X1} + \Delta CS^*_{X1} = -w_1^{(1)} X_1^{(1)} t_{X1}(1+0.5EX_1)$ **Scenario 2 (t_{Xn2}=-0.01):** $\Delta TS = \Delta PS_{Xn2} + \Delta CS^*_{Xn2} = -w_{n2}^{(1)} X_{n2}^{(1)} t_{Xn2}(1+0.5EX_{n2})$ **Scenario 3 (t_{Xs2}=-0.01):** $\Delta TS = \Delta PS_{Xs2} + \Delta CS^*_{Xs2} = -w_{s2}^{(1)} X_{s2}^{(1)} t_{Xs2}(1+0.5EX_{s2})$ **Scenario 4 (t_{Fn2}=-0.01):** $\Delta TS = \Delta PS_{Fn2} + \Delta CS^*_{Fn2} = -s_{n2}^{(1)} F_{n2}^{(1)} t_{Fn2}(1+0.5EF_{n2})$ **Scenario 5 (t_{Fn3}=-0.01):** $\Delta TS = \Delta PS_{Fn3} + \Delta CS^*_{Fn3} = -s_{n3}^{(1)} F_{n3}^{(1)} t_{Fn3}(1+0.5EF_{n3})$ **Scenario 6 (t_{Yp}=-0.01):** $\Delta TS = \Delta PS_{Yp} + \Delta CS^*_{Yp} = -v_p^{(1)} Y_p^{(1)} t_{Yp}(1+0.5EY_p)$ **Scenario 7 (t_{Zme}=-0.01):** $\Delta TS = \Delta PS_{Zme} + \Delta CS^*_{Zme} = -u_{me}^{(1)} Z_{me}^{(1)} t_{Zme}(1+0.5EZ_{me})$ **Scenario 8 (t_{Zmd}=-0.01):** $\Delta TS = \Delta PS_{Zmd} + \Delta CS^*_{Zmd} = -u_{md}^{(1)} Z_{md}^{(1)} t_{Zmd}(1+0.5EZ_{md})$ **Scenario 9 (n_{Qne}=0.01):** $\Delta TS = \Delta CS_{Qne} + \Delta PS^*_{Qne} = p_{ne}^{(1)} Q_{ne}^{(1)} n_{Qne}(1+0.5EQ_{ne})$ **Scenario 10(n_{Qse}=0.01):** $\Delta TS = \Delta CS_{Qse} + \Delta PS^*_{Qse} = p_{se}^{(1)} Q_{se}^{(1)} n_{Qse}(1+0.5EQ_{se})$ **Scenario 11 (n_{Qnd}=0.01):** $\Delta TS = p_{nd}^{(1)} Q_{nd}^{(1)} n_{Qnd}(1+0.5EQ_{nd})$ **Scenario 12(n_{Qsd}=0.01):** $\Delta TS = p_{sd}^{(1)} Q_{sd}^{(1)} n_{Qsd}(1+0.5EQ_{sd})$	$\Delta CS_{Qd} = p_{nd}^{(1)} Q_{nd}^{(1)} (n_{Qnd}\text{-}Ep_{nd})(1+0.5EQ_{nd}) + p_{sd}^{(1)} Q_{sd}^{(1)} (n_{Qsd}\text{-}Ep_{sd})(1+0.5EQ_{sd})$

B. Measuring Directly from PE Curves in Individual Markets

Alternatively, the welfare change to domestic consumers can be measured directly as the consumer surplus areas off the partial equilibrium demand curves in the two domestic beef markets. Two price changes are involved in the domestic consumers' expenditure function in this case. As more than one source of equilibrium feedback exists, care needs to be taken to measure the area in a sequential manner.

Consider the two domestic beef markets in Figure 6.5 for Scenario 1, where the cost of producing weaners is reduced by 1% (t_{X1}=-1%). The expenditure function for domestic consumers and its derived demand functions are not changed by the exogenous shift in the weaner market. They are denoted as $e(p_{nd}, p_{sd}, P)$ and $D_{nd}(p_{nd}, p_{sd}, P)$ and $D_{sd}(p_{nd}, p_{sd}, P)$, for both before and after the displacement, where P is the vector of other prices outside the model and is omitted below without losing generality. The profit function and the derived supply functions for the domestic beef producers *are* changed as a direct result of the initial shift in weaner supply. In particular, in the first instance, both supply curves for Q_{nd} and Q_{sd} are shifted down. If we assume all profit and utility functions in the model are quadratic and all demand and supply functions are linear around the local areas of the initial equilibrium, a parallel initial shift in the supply of weaners (X_1) implies that all induced shifts in other markets are also parallel around the local areas.[2] Because the two products are assumed substitutes in both demand and supply, as second round effects, both the conditional demand and supply curves are shifted further as the result of price changes of the substitute beef product. The situation is illustrated in Figure 6.5.

Following the approach in Thurman (1991a, p3), as the expenditure function is unchanged, the changes in the domestic beef consumers' welfare can be measured as

[2] In this example, the initial shift K in the weaner market changes the profit function of domestic beef producers from $\pi(p_{nd}, p_{sd}, w_1, W)$ to $\pi(p_{nd}, p_{sd}, w_1\text{-}K, W)$, where w_1 is the price of weaners and W is the price for all other prices in the model. The conditional demand curves before and after the shift for Q_{nd} are $S_{nd}(p_{nd} \mid p_{sd}^{(1)}, w_1^{(1)}, W^{(1)})$ and $S_{nd}(p_{nd} \mid p_{sd}^{(2)}, w_1^{(2)}\text{-}K, W^{(2)})$. If $\pi(.)$ is quadratic, changing the values of other prices or subtracting another

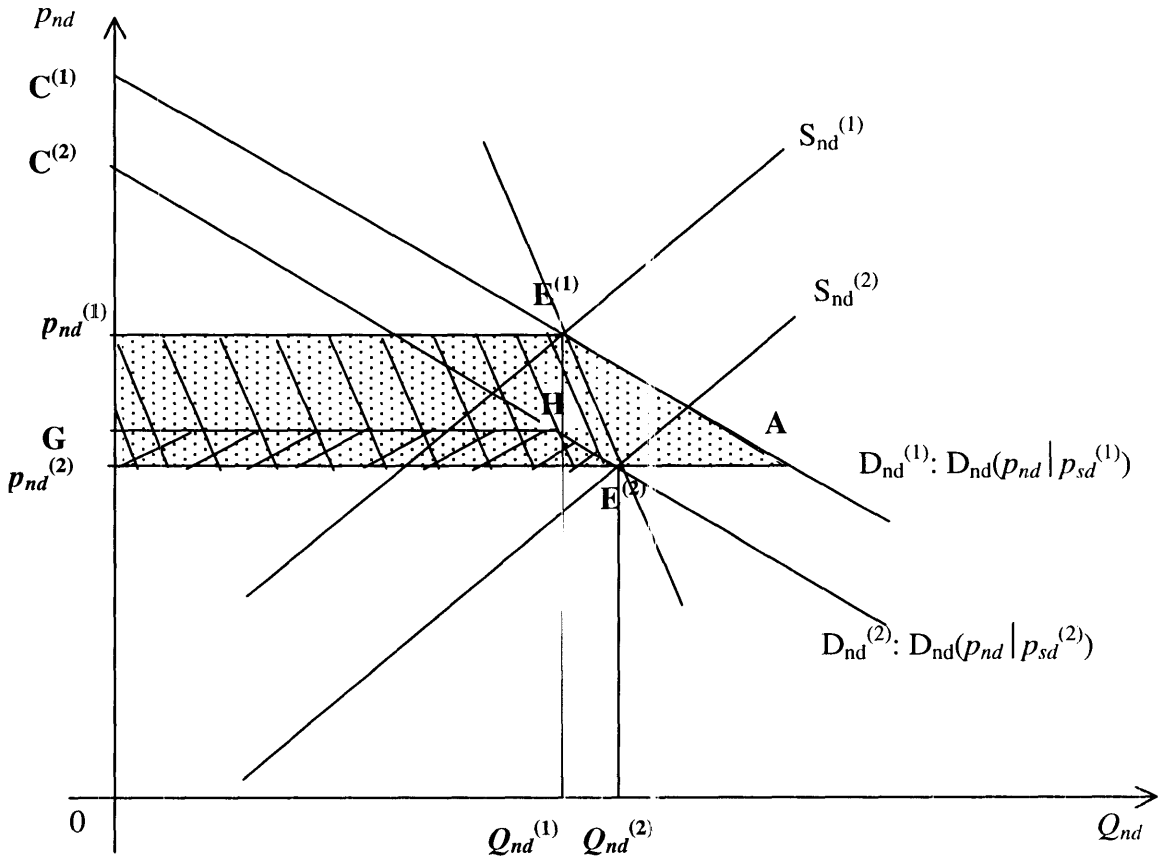

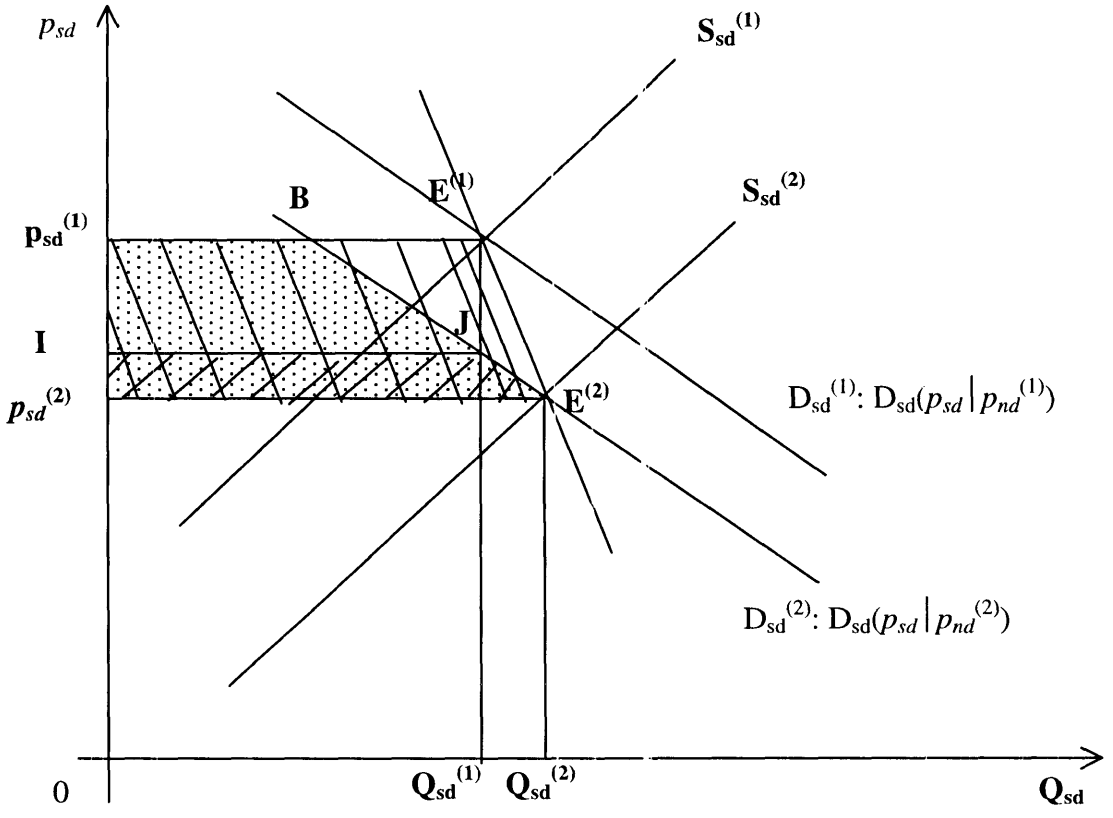

Figure 6.5 Domestic Consumer Welfare Changes for Scenario 1-10

price variable with a constant only changes the intercept of the conditional supply curve, which implies a parallel shift of the linear supply curve.

$$
\begin{aligned}
-\Delta e &= -(e(p_{nd}^{(2)}, p_{sd}^{(2)}) - e(p_{nd}^{(1)}, p_{sd}^{(1)})) \\
&= -(e(p_{nd}^{(2)}, p_{sd}^{(1)}) - e(p_{nd}^{(1)}, p_{sd}^{(1)}) + e(p_{nd}^{(2)}, p_{sd}^{(2)}) - e(p_{nd}^{(2)}, p_{sd}^{(1)})) \\
&= -(\int_{p_{nd}^{(1)}}^{p_{nd}^{(2)}} \frac{\partial e(p_{nd}, p_{sd}^{(1)})}{\partial p_{nd}} dp_{nd} + \int_{p_{sd}^{(1)}}^{p_{sd}^{(2)}} \frac{\partial e(p_{nd_{nd}}^{(2)}, p_{sd})}{\partial p_{sd}} dp_{sd}) \\
&= \int_{p_{nd}^{(2)}}^{p_{nd}^{(1)}} D_{nd}^{h}(p_{nd} | p_{sd}^{(1)}) dp_{nd} + \int_{p_{sd}^{(2)}}^{p_{sd}^{(1)}} D_{sd}^{h}(p_{sd} | p_{nd}^{(2)}) dp_{sd}
\end{aligned}
\tag{6.10}
$$

If we use the Marshallian demand curves in places of Hicksian demand curves in the above integrals, the welfare change can be approximated by conventional economic surplus areas as

$$
\Delta CS_{Qd} = \int_{p_{nd}^{(2)}}^{p_{nd}^{(1)}} D_{nd}(p_{nd} | p_{sd}^{(1)}) dp_{nd} + \int_{p_{sd}^{(2)}}^{p_{sd}^{(1)}} D_{sd}(p_{sd} | p_{nd}^{(2)}) dp_{sd} \tag{6.11}
$$

That is, the change in the economic surplus of domestic consumers is given by the sum of areas integrated sequentially off the partial demand curves in both markets. Note that, in Figure 6.5, the first integral is area $Ap_{nd}^{(2)}p_{nd}^{(1)}E^{(1)}$ integrated off the *initial* demand curve in the Q_{nd} market, and the second integral relates to area $BE^{(2)}p_{sd}^{(2)}p_{sd}^{(1)}$ integrated off the *new* demand curve in the Q_{sd} market.

Note, however, these areas are not the same as the changes between the old and new consumer surplus areas one might intuitively expect. The consumer surplus in the Q_{nd} market off the initial and new PE demand curves are areas $p_{nd}^{(1)}E^{(1)}C^{(1)}$ and $p_{nd}^{(2)}E^{(2)}C^{(2)}$, giving a difference of area $GHE^{(2)}p_{nd}^{(2)}$. Similarly, the change in consumer surplus areas off the new and old conditional demand curves in Q_{sd} market is area $IJE^{(2)}p_{sd}^{(2)}$. It is tempting to use the areas $GHE^{(2)}p_{nd}^{(2)}$ and $IJE^{(2)}p_{sd}^{(2)}$ as the domestic consumers' welfare measure ΔCS_{Qd}[3]. As shown in Figure 6.5, this could seriously underestimate the economic surplus change for domestic consumers for this particular case. An example of the error is given in Part C below.

It can be shown that, for local linear demand functions, ΔCS_{Qd} in Equation (6.11) can be calculated as

$$
\Delta CS_{Qd} = \text{Area}(Ap_{nd}^{(2)}p_{nd}^{(1)}E^{(1)}) + \text{Area}(BE^{(2)}p_{sd}^{(2)}p_{sd}^{(1)}) \tag{6.2.12}
$$

$$= -p_{nd}^{(1)}Q_{nd}^{(1)}Ep_{nd}(1+0.5\eta_{(Qnd,\,pnd)}Ep_{nd})$$

$$-p_{sd}^{(1)}Q_{sd}^{(1)}Ep_{sd}(1+EQ_{sd}-0.5\eta_{(Qsd,\,psd)}Ep_{sd}).$$

Two things are worth mentioning at this point. First, the derivation in Equation (6.10) followed a particular equilibrium path from $E^{(1)}$ to $E^{(2)}$; that is, $(p_{nd}^{(1)}, p_{sd}^{(1)})$ to $(p_{nd}^{(2)}, p_{sd}^{(1)})$ first and then $(p_{nd}^{(2)}, p_{sd}^{(1)})$ to $(p_{nd}^{(2)}, p_{sd}^{(2)})$. There is an infinite number of paths for the same displacement from $E^{(1)}$ to $E^{(2)}$. For example, considering a path via $(p_{nd}^{(1)}, p_{sd}^{(2)})$ instead of $(p_{nd}^{(2)}, p_{sd}^{(1)})$ in Equation (6.10), we would have

(6.13) $$\Delta CS_{Qd} = \int_{p_{nd}^{(2)}}^{p_{nd}^{(1)}} D_{nd}(p_{nd}|p_{sd}^{(2)})dp_{nd} + \int_{p_{sd}^{(2)}}^{p_{sd}^{(1)}} D_{sd}(p_{sd}|p_{nd}^{(1)})dp_{sd}$$

$$= -p_{nd}^{(1)}Q_{nd}^{(1)}Ep_{nd}(1+EQ_{nd}-0.5\eta_{(Qnd,\,pnd)}Ep_{nd})$$

$$-p_{sd}^{(1)}Q_{sd}^{(1)}Ep_{sd}(1+0.5\eta_{(Qsd,\,psd)}Ep_{sd})$$

It can be shown that, under the symmetry condition for the Marshallian cross-price elasticities at the equilibrium point in Equation (4.5.11) in Chapter 4, that is,

(6.14) $$p_{nd}^{(1)}Q_{nd}^{(1)}\eta_{(Qnd,\,psd)} = p_{sd}^{(1)}Q_{sd}^{(1)}\eta_{(Qsd,\,pnd)},$$

and given Equations (4.6.55) and (4.6.56) in Chapter 4, Equations (6.12) and (6.13) are exactly the same. In other words, the symmetry condition imposed on the Marshallian elasticities in Equation (6.14) guarantees path independence, or the uniqueness of the domestic consumers' surplus change.

Second, it can be shown that, under the symmetry condition in Equation (6.14), both the expressions in Equations (6.12) and (6.13) can be written as

(6.15) $$\Delta CS_{Qd} = p_{nd}^{(1)}Q_{nd}^{(1)}(n_{Qnd}-Ep_{nd})(1+0.5EQ_{nd})$$

[3] For example, these were the areas used in Piggott, Piggott and Wright (1995) and Hill, Piggott and Griffith

$$+ p_{sd}^{(1)}Q_{sd}^{(1)}(n_{Qsd}\text{-}Ep_{sd})(1+0.5EQ_{sd}),$$

where n_{Qnd}=n_{Qnd}=0 for Scenario 1.

In Figure 6.5, the expression in Equation (6.15) relates to conventional areas for economics surplus changes measured off the curve connecting $E^{(1)}$ and $E^{(2)}$ in both markets, that is, area $p_{nd}^{(1)}E^{(1)}E^{(2)}p_{nd}^{(2)}$ in the Q_{nd} market and area $p_{sd}^{(1)}E^{(1)}E^{(2)}p_{sd}^{(2)}$ in the Q_{sd} market. Note that any one of these two areas does not have significant economic meaning, but the sum of the two areas measures the consumer surplus change to domestic consumers.

It is obvious from the above derivation that, without the guarantee of integrability conditions, the measure for economic surplus change in the case of multiple price changes is not unique but path dependent. However, an important insight from this exercise is that integrability conditions may only affect the welfare measures at the second order terms. The first-order term, i.e. $p_{nd}^{(1)}Q_{nd}^{(1)}(n_{nd}\text{-}Ep_{nd})+p_{sd}^{(1)}Q_{sd}^{(1)}(n_{sd}\text{-}Ep_{sd})$ in this example, seems to be the same for alternative paths and does not seem to be affected by the integrability conditions. This may be the reason behind Hausman's (1981) and LaFrance's (1991) empirical results that, as long as the shifts considered are small, the errors from using Marshallian measures or ignoring integrability conditions are insignificant for the trapezoid areas of economic welfare changes, though they could be significant in the measures of triangular areas of 'deadweight loss'. The triangular area is a second order measure ($\mathbf{O}(\lambda^2)$ in the terminology of Chapter 3, where λ relates to the amount of the initial shift), but the trapezoid area is of first-order in magnitude ($\mathbf{O}(\lambda)$).

Finally, it is obvious that the above derivation is also correct for the other scenarios when the initial shifts occur in other markets of the model (Scenarios 2 to 10). Thus, the formula in Equation (6.15) also applies to Scenarios 2 to 10. The formula for economic surplus changes for domestic consumers in Scenario 1 to 10 is summarised in the second column of Table 6.2.

C. Comparison of the Two Approaches

The concern in Thurman (1991a) for the situation of multiple equilibrium feedback relates to whether the total welfare change can be measured in a 'single' market, and whether the economic surplus areas measured off the GE curves in a single market relate to identifiable

(1996) for producer surplus changes in multi-feedback models.

groups. However, from the derivation in part B above, given that we have already had a disaggregated multi-market model and given that we have already specified the information on all the partial equilibrium curves in individual markets, the welfare changes for individual groups can be measured as areas off the partial equilibrium curves in individual markets.

As discussed in Sections 2.5.4 of Chapter 2 and 4.5 of Chapter 4, the necessary condition for the equivalence of the two approaches in parts A and B is that of integrability. As the integrability conditions have been imposed at the initial equilibrium in Chapters 4 and 5, the two approaches should give consistent answers. In Table 6.3, using the data specified in Chapter 5, the results of the domestic consumer welfare changes and the total welfare changes calculated from the two approaches for Scenario 1 are presented. They are almost the same.

Table 6.3 Comparison of Results from Three Alternative Approaches for Scenario 1 (t_{X1} =-0.01) (in $m)

Factor Providers:

$\Delta PS_{X1} = 8.1308$, $\Delta PS_{Xn2} = 0.0482$, $\Delta PS_{Xs2} = 0.4730$, $\Delta PS_{Fn2} = 0.2258$,

$\Delta PS_{Fn3} = 0.0313$, $\Delta PS_{Yp} = 0.6309$, $\Delta PS_{Zme} = 0.1589$, $\Delta PS_{Zmd} = 0.4869$.

Overseas Consumers:

$\Delta CS_{Qne} = 1.0263$, $\Delta CS_{Qse} = 1.8300$.

Sub-Total:

$\Delta ES_{\text{rest}(Qd)} = 13.0421$

Approach A (via GE curve):	**Approach B** (via same PE curves):	**Approach C** (via different PE curves in both markets):
$\Delta TS = \Delta PS_{X1} + \Delta CS_{X1}^{*}$ = 8.1308+11.4833 = 19.6141	$\Delta CS_{Qd} = \text{Area}(Ap_{nd}^{(2)}p_{nd}^{(1)}E^{(1)})$ + $\text{Area}(BE^{(2)}p_{sd}^{(2)}p_{sd}^{(1)})$ = 1.6126 + 4.9531 = 6.5657	$\Delta CS_{Qnd} + \Delta CS_{Qsd}$ = $\text{Area}(GHE^{(2)}p_{nd}^{(2)})$ + $\text{Area}(IJE^{(2)}p_{sd}^{(2)})$ =4.1320
$\Delta CS_{Qd} = \Delta TS - \Delta ES_{\text{rest}(Qd)}$ = 6.5720	$\Delta TS = 19.6079$	$\Delta TS = 17.1741$

The areas relating to the differences of two economic surplus areas off the old and new PE demand curves, which have been used in some published studies, are also calculated for Scenario 1 in Table 6.3. The consumer surplus is underestimated with 37% error.

In the base run of the model in Chapter 7, Approach B using the PE areas sequentially as in the second column of Table 6.2 is used.

6.4.2 Scenario 11 and 12 – Two Alternative Approaches

Now consider the welfare changes for domestic consumers for Scenarios 11 and 12, where the initial shocks are the demand shifts in the domestic beef markets. In these cases, in addition to the initial demand shifts, both demand and supply curves are further shifted endogenously. Again, there are two alternatives to measuring the domestic consumers' welfare gains.

A. Measuring through ΔTS off GE Curves in a Single Market

Consider the markets for the two domestic beef products in Figure 6.6 for Scenario 11, where an initial upward shift occurs in the demand curve for grainfed beef (Q_{nd}). Initially, the demand curve for Q_{nd} is shifted from $D_{nd}^{(1)}$: $D_{nd}(p_{nd}| p_{sd}^{(1)})$ to $D_{sd}^{(1)'}$: $D_{nd}(p_{nd}\text{-}K, p_{sd}^{(1)})$. Because the two products are related to each other in both demand and supply, the demand and supply curves for both products are subsequently shifted endogenously before reaching a new equilibrium $E^{(2)}$ in both markets.

Based on the derivation in Thurman (1991a) for the situation involving two channels of equilibrium feedback, the total welfare change can be measured as the sum of the surplus areas measured off the GE demand and supply curves D_{nd}^* and S_{nd}^*, although these two areas do not have welfare significance individually. In Figure 6.6 the GE supply curve S_{nd}^* is given by the curve connecting $E^{(1)}$ and $E^{(2)}$. The GE demand curve D_{nd}^* is given by the connection of $E^{(2)}$ and G, where G relates to the price the consumer is willing to pay for the initial quantity $Q_{nd}^{(1)}$ after the promotion. Thus, the total economic surplus change is given by

$$
\begin{aligned}
\Delta TS &= Area(HGE^{(2)}E^{(1)}C) \\
&= \int_{p_{nd}^{(2)}}^{p_{nd}^{(1)}} D_{nd}^*(p_{nd})dp_{nd} + \int_{p_{nd}^{(1)}}^{p_{nd}^{(2)}} S_{nd}^*(p_{nd})dp_{nd} \qquad (6.16) \\
&= p_{nd}^{(1)}Q_{nd}^{(1)}n_{Qnd}(1+0.5EQ_{nd}).
\end{aligned}
$$

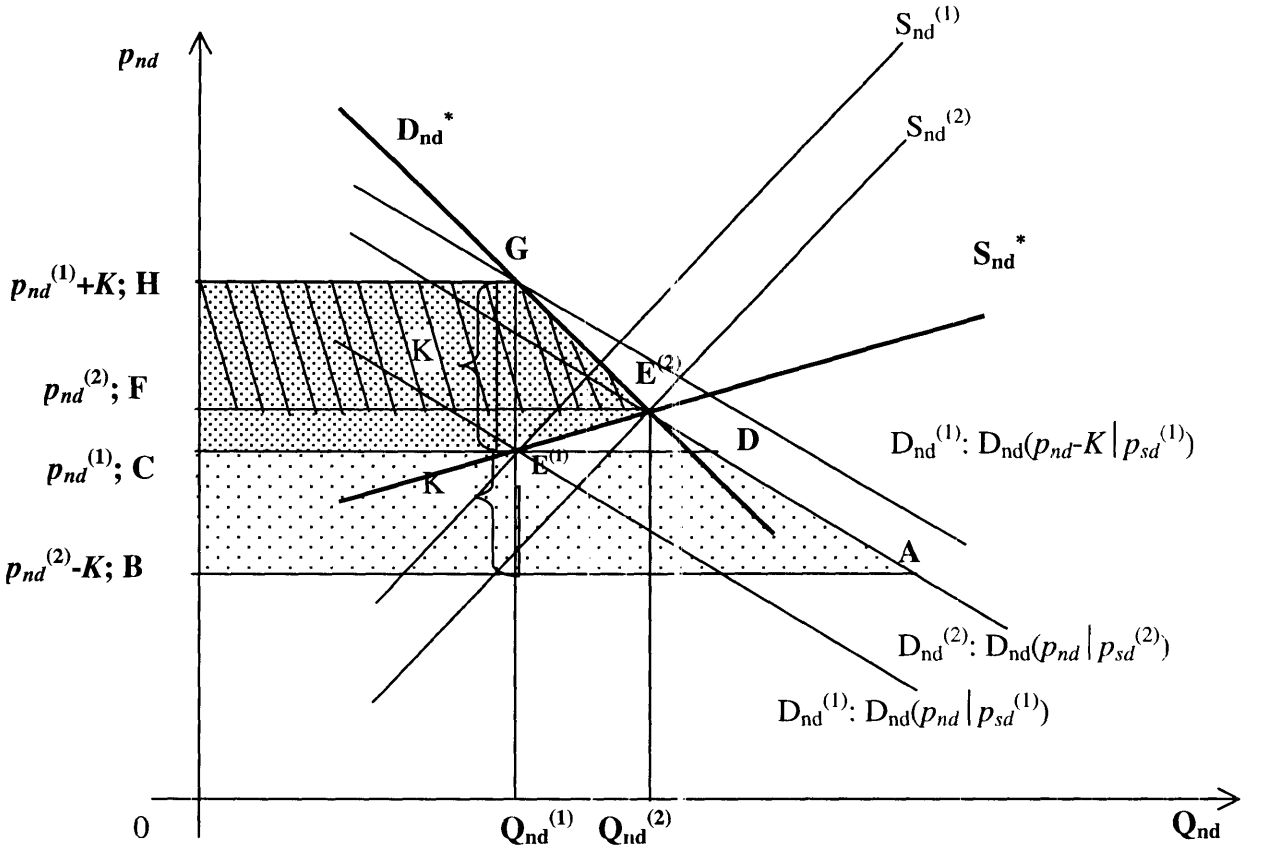

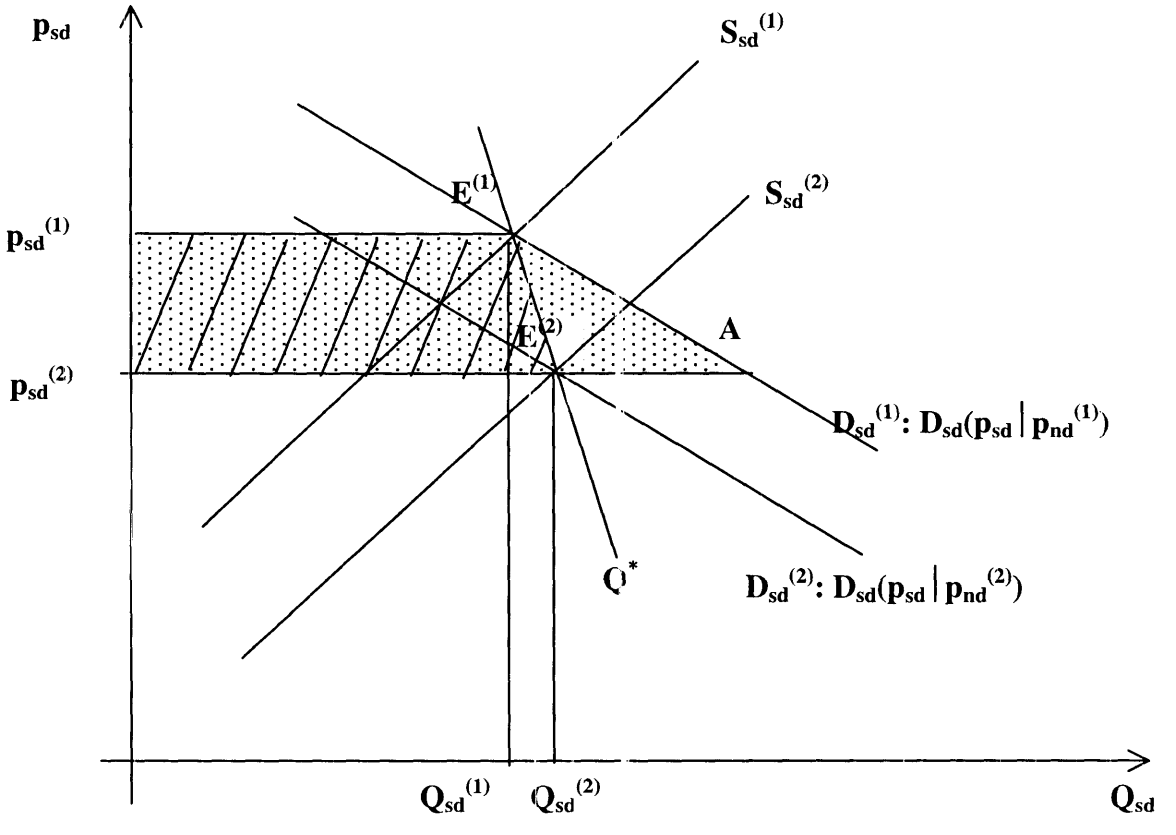

Figure 6.6 Domestic Consumer Welfare Change for Scenario 11 (n_{Qnd}= 0.01)

Similarly, the surplus change to the domestic consumer from Scenario 12 is given by

$$\Delta TS = p_{sd}^{(1)} Q_{sd}^{(1)} n_{Qsd} (1 + EQ_{sd}). \tag{6.17}$$

The domestic consumers' surplus change is thus given by

$$\Delta CS_{Qd} = \Delta TS - \Delta ES_{rest(Qd)}, \tag{6.18}$$

where $\Delta ES_{rest(Qd)}$ is the sum of the welfare changes to the other ten industry groups given in Table 6.1.

B. Measuring Directly from PE Curves

The domestic consumers' benefits can also be measured directly through the partial equilibrium curves in the Q_{nd} and Q_{sd} markets.

Examine first the economic welfare change for the domestic consumers for scenario 11 when the initial shock to the system is from a 1% exogenous demand shift in the Q_{nd} market (n_{Qnd}=0.01). The expenditure functions before and after the exogenous shift are e(p_{nd}, p_{sd}) and e(p_{nd}-K, p_{sd}), where K (K>0) is the increase in the domestic consumers' willingness to pay per unit of grainfed beef. The compensating variation (CV) is given by

$$\begin{aligned} -\Delta e &= e(p_{nd}^{(2)} - K, p_{sd}^{(2)}) - e(p_{nd}^{(1)}, p_{sd}^{(1)}) \\ &= -(e(p_{nd}^{(2)} - K, p_{sd}^{(2)}) - e(p_{nd}^{(1)}, p_{sd}^{(2)}) + e(p_{nd}^{(1)}, p_{sd}^{(2)}) - e(p_{nd}^{(1)}, p_{sd}^{(1)})) \\ &= -(\int_{p_{nd}^{(1)}}^{p_{nd}^{(2)}-K} D_{nd}^{h}(p_{nd}, p_{sd}^{(2)}) dp_{nd} + \int_{p_{sd}^{(1)}}^{p_{sd}^{(2)}} D_{sd}^{h}(p_{nd}^{(1)}, p_{sd}) dp_{sd}) \end{aligned} \tag{6.19}$$

Using Marshallian demand curves, the consumer surplus change is given by

$$\Delta CS_{Qd} = -\int_{p_{nd}^{(1)}}^{p_{nd}^{(2)}-K} D_{nd}(p_{nd}, p_{sd}^{(2)}) dp_{nd} - \int_{p_{sd}^{(1)}}^{p_{sd}^{(2)}} D_{sd}(p_{nd}^{(1)}, p_{sd}) dp_{sd} \tag{6.20}$$

These two integrals relate to areas measured off the *new* demand curve $D_{nd}^{(2)}$ in the Q_{nd} market and *initial* demand curve $D_{sd}^{(1)}$ in the Q_{sd} market. In Figure 6.6, the first integral relates to area ABCD in the Q_{nd} market and the second integral relates to area $Ap_{sd}^{(2)}p_{sd}^{(1)}E^{(1)}$ in the Q_{sd} market. It can be shown that they can be calculated as

$$(6.21) \qquad \Delta CS_{Qd} = Area(ABCD) + Area(Ap_{sd}^{(2)}p_{sd}^{(1)}E^{(1)})$$

$$= p_{nd}^{(1)}Q_{nd}^{(1)}(n_{Qnd}-Ep_{nd})(1 + EQ_{nd} - 0.5\eta_{(Qnd\ pnd)}(Ep_{nd} - n_{Qnd}))$$

$$- p_{sd}^{(1)}Q_{sd}^{(1)}Ep_{sd}(1+ 0.5\eta_{(Qsd,\ psd)}Ep_{sd}).$$

Similar to the analysis in Part B of 6.4.1 (Equations (6.10)-(6.15)), it can be shown that under the symmetry condition of Marshallian elasticities in Equation (6.14), ΔCS_{Qd} is uniquely defined and path independent. Using the condition in Equation (6.14), it can be shown that Equation (6.21) can be written as

$$(6.22) \qquad \Delta CS_{Qd} = \text{Area}(HGE^{(2)}F) + \text{Area}(p_{sd}^{(1)}E^{(1)}E^{(2)}p_{sd}^{(2)})$$

$$= p_{nd}^{(1)}Q_{nd}^{(1)}(n_{Qnd}-Ep_{nd})(1+0.5EQ_{nd})$$

$$+ p_{sd}^{(1)}Q_{sd}^{(1)}(n_{Qsd}-Ep_{sd})(1+0.5EQ_{sd}),$$

These relate to area $HGE^{(2)}F$ in Q_{nd} market and $p_{sd}^{(1)}E^{(1)}E^{(2)}p_{sd}^{(2)}$ in Q_{sd} market in Figure 6.6.

Similarly, for Scenario 12 when the initial shift occurs in the Q_{sd} market, the domestic consumers' welfare change can be calculated as

$$(6.23) \qquad \Delta CS_{Qd} = -\Delta e = -p_{nd}^{(1)}Q_{nd}^{(1)})Ep_{nd}(1+ 0.5\eta_{(Qnd,\ pnd)}Ep_{nd})$$

$$+p_{sd}^{(1)}Q_{sd}^{(1)}(n_{Qsd}-Ep_{sd})(1 + EQ_{sd} - 0.5\eta_{(Qsd,\ psd)}(Ep_{sd} - n_{Qsd})).$$

Also, Equation (6.23) becomes Equation (6.22) under symmetry condition (6.14) and Equations (4.6.55) and (4.6.56) in Chapter 4. In other words, the formula for ΔCS_{Qd} is the same for all 12 scenarios under the Marshallian symmetry condition. These formulas are summarised in Table 6.2.

6.5 Summary

In this chapter, calculation of economic welfare measurements for the various industry groups for the 12 investment scenarios have been examined in detail. Based on the results in Willig (1976), Hausman (1981) and LaFrance (1991), changes in economic surpluses off uncompensated demand and supply curves were used as measures of welfare implications, and the exact measures of compensating variation or equivalent variation (CV or EV) as suggested in Hausman (1981) and Martin and Alston (1994) were not pursued. As the interest in this study is focused on the trapezoid areas of welfare changes rather than the triangular 'deadweight loss', and as the equilibrium shifts considered in this study were small, the economic surplus measures were expected to be good approximates of CV or EV measures.

Formulas for economic surplus changes were derived analytically by examining the profit or expenditure functions of the relevant industry groups and the associated integrals of supply or demand functions. These welfare changes were also illustrated graphically as areas in the relevant markets.

For ten of the 11 industry groups identified in the model (i.e. eight producer groups and two overseas consumer groups), only a single price change is involved in the relevant profit or expenditure functions. Only one source of equilibrium feedback exists in each of these ten markets. The economic surplus changes in these cases can be measured straightforwardly as areas off the exogenously fixed demand or supply curves.

Two sources of equilibrium feedback (Thurman, 1991a) are involved in the decision problem for domestic consumers. Two alternative approaches to measuring the domestic consumers' welfare changes have been discussed; that is, via the total surplus change measured off the GE curves in a single market and via the areas off the PE curves in individual markets. When integrability conditions are imposed at the base equilibrium, the two approaches are equivalent. It was also shown that under the integrability conditions imposed on Marshallian demand elasticities, the economic surplus measures are uniquely defined and independent of the path of the displacement.

The key to this problem was the recognition that while we can recognise demand curves for the two domestic products, domestic consumers consume both products and hence this choice is

reflected in the one expenditure function for consumers which has the prices of both beef products as arguments. Another important consideration was the recognition that even though promotion can be thought of as increasing the willingness to pay of consumers, it effectively makes the promoted product less expensive in the minds of consumers and hence causes an initial shift to the left in the demand for the substitute product.

The economic surplus measures are path dependent when integrability conditions are not satisfied. However, the derivation in this chapter implied that the first-order terms ($\mathbf{O}(\lambda)$) of the economic surplus measures may be path independent and equal to the first-order terms of CV or EV measures. The integrability conditions may only affect the economic surplus measures at the second order terms ($\mathbf{O}(\lambda^2)$). Note that the changes in economic surplus are of the first-order magnitude of the initial shifts ($\mathbf{O}(\lambda)$). Thus, as long as the considered equilibrium displacements are small (λ is small), not satisfying integrability conditions may not result in significant errors in using the traditional measures of economic surplus changes (trapezoid areas). However, if the second-order measure of triangular 'deadweight loss' is of interest in a policy study, integrability conditions are vital and violation of them could result in significant errors. This may be the reasons behind the empirical observations in Hausman (1981) and LaFrance (1991).

Finally, it is well-known (Just, Hueth and Schmitz 1982, p469; Alston, Norton and Pardey 1995, p232) that, when integrability conditions are met, there are two ways of calculating the welfare effects: measuring the total welfare change off the GE curves in the single market where the initial shift occurs, or measuring the individual welfare effects off the PE curves in individual markets and adding up. Thurman (1991a) has pointed out the complication in measuring economic surplus via GE curves in a single market when multiple sources of equilibrium feedback exist. In particular, he showed that the area off the GE demand or supply curve individually does not measure welfare to a identifiable group, but the sum of the two areas measures the total welfare change. In this chapter, it was pointed out that, in case of multiple channels of feedback, caution also needs to be taken in measuring economic surplus off PE demand or supply curves. When two markets are related through more than one source, the economic surplus change to producers or consumers should be measured sequentially in the two markets and then added up; that is, the surplus change based on the (same) *initial* PE curve in the first market plus the surplus change based on the (same) *new* PE curve in the second market. It is wrong to calculate changes of surplus areas based on different PE curves in the

same market, as has been done in some past studies. It was shown with an example that the error in doing so could be significant (of the order of $\mathbf{O}(\lambda)$).