Chapter 1

Introduction

Sulphur hexafluoride (SF_6) is widely used as an insulating medium in high voltage systems including switchgear, transformers and transmission lines. If electrical breakdown occurs in SF_6, a corona, glow or arc discharge forms, and this results in dissociation of SF_6 molecules. However, if the SF_6 gas is pure and the walls of the containing vessel are chemically inert, the products of dissociation tend preferentially to recombine at a rapid rate to reform SF_6. If any chemical reaction with gas impurity or wall material occurs during or immediately following a discharge, recombination may be substantially reduced and the insulating efficiency of the high voltage system is degraded as a consequence of the loss of SF_6. Invariably, it is the latter process that takes place, because of the presence of contaminants such as oxygen and water vapour. The reactive SF_6 dissociation products such as SF_x and fluorine react with the contaminants to form stable gas-molecular species including the sulphur oxyfluorides, SOF_2, SO_2F_2 and SOF_4; sulphur oxide, SO; sulphur dioxide, SO_2; and hydrofluoric acid, HF (Van Brunt, 1985; Woolsey and Grey, 1989): solid by-products of a discharge in SF_6 include metal fluorides and sulphides, and sulphur. Discharge formation often occurs in high voltage systems; for example, the switching process in a circuit-breaker involves high-current arc formation, and in passive systems such as transformers and transmission lines insidious low-current coronas are an ongoing problem.

In switchgear there is a significant erosion of electrodes and surrounding insulators at every switch. The amount of erosion is proportional to the energy of the arc when the switching occurs. The energy is proportional to the arc voltage and current. The arc energy is also proportional to the level of SF_6 degradation. Damage due to erosion is cumulative and decreases switching efficiency, and this can ultimately lead to malfunctioning of the

switchgear. As there is a relation between SF_6 degradation and the damage to electrodes and insulators it is possible to estimate the degree of the damage if the amount of the remaining SF_6 is known (Belmadani *et al.*, 1991B), provided there are no competing sources for loss, the most common being gas leakage. This information is useful for determining when switchgear should be serviced. Some of the by-products, such as SF_2 and SF_4, are corrosive. They react with the different materials in the switchgear and change their mechanical and electrical properties. Also, the newly produced gases will change the dielectric properties of the gas mixture (Gänger and Vigreux, 1981).

It is clear therefore that a monitoring technique, which provides a measure of the level of SF_6 or dissociation by-products in a high voltage system, would allow an informed decision to be made on when the SF_6 should be replaced, in order to maintain the desired level of insulation. As such systems involve high voltages and a high level of electromagnetic interference, an optical monitoring technique appears to be the most appropriate choice. In this work a number of optical options have been examined and this thesis deals with measurements that may lead to an optical monitoring system for the degradation of SF_6.

Three methods have been investigated for determining the level of SF_6 degradation: 1) measuring the refractive index of the residual gas, 2) measuring sulphur deposition on an unclad optical fibre placed in the discharge chamber and 3) measuring the absorption of CO_2 laser light in a silver halide optical fibre placed in the discharge chamber.

1.1. Refractivity measurement

Dissociative degradation in an SF_6 discharge leads to the production of by-products each of which has a lower refractive index than SF_6. Since the amount of SF_6 decreases, the overall refractive index at a fixed pressure decreases. This means that a high-voltage SF_6-insulated system with a built-in optical interferometer, perhaps incorporating optical fibres, could be monitored continuously to provide a measure of SF_6 degradation. As a

first step in the development of a monitoring system based on refractivity, we have investigated the refractivity of SF_6 at two wavelengths; 632.99 nm, using a helium-neon laser, and 1300 nm, using an infra-red laser diode. In addition, we have investigated the refractivity of thionyl fluoride (SOF_2) at the same wavelengths. SOF_2 is produced in SF_6 glow and corona discharges (Van Brunt, 1985; Woolsey and Grey,1989). It is produced by reactions of SF_2, SF_3 and SF_4 with OH, O and H_2O, and, for example, if there is glass within the system, by the process:

$$2SF_4 + SiO_2 \rightarrow SiF_4 + 2SOF_2 .$$

1.2. Sulphur Deposition on an Optical Fibre

Dissociative degradation in an SF_6 discharge also leads to the production of solid deposits: metal fluorides, metal oxides and sulphur. Metal fluorides and metal oxides are produced by various chemical reactions in the area around electrodes while sulphur is produced in all parts of the discharge chamber. The sulphur deposits on the walls of the chamber, and if a declad optical fibre is introduced into the chamber, sulphur will deposit on it. This deposition on the fibre can be monitored using light transmission through the fibre.

1.3. CO_2 laser light absorption

SF_6 has a strong absorption line around 10.6 μm, which is the lasing line of the CO_2 laser. In fact, this absorption is so strong that light from a 4 W CO_2 laser is absorbed by a length of 10 cm in SF_6 at 2 Torr (267 Pa). When a CO_2 laser beam is launched into a silver halide optical fibre placed in an SF_6 atmosphere, light is absorbed via the evanescent field, and this can be used for measuring the pressure of SF_6 from 9 Torr (1200 Pa) up to several atmospheres.

Chapter 2

Properties and applications of SF_6

2.1. Chemical properties

Sulphur hexafluoride is a colourless, odourless, tasteless, non-combustible, non-toxic (Kimmerle, 1960), chemically inert gas (Schumb, 1947) and non-flammable under ordinary conditions. The chemical inertness of SF_6 comes from its highly symmetrical structure of an octahedron (Ewing and Sutton, 1963) where six fluorine atoms are equidistant from a sulphur atom as shown in figure 2.1. It remains unchanged even up to 500 °C. The distance from the sulphur atom to any one of fluorine atoms in the SF_6 molecule is 0.1564 ± 0.001 nm (Stacey *et al.*, 1965). The inertness is similar to that of the noble gases.

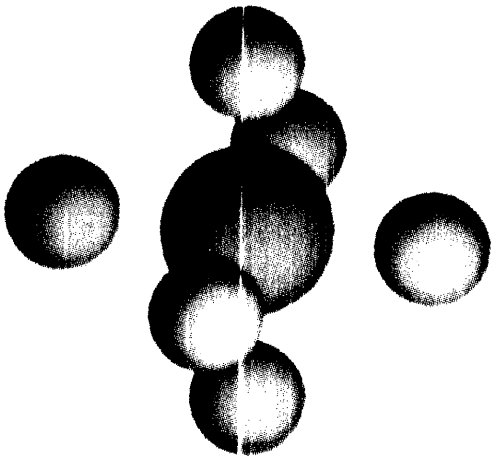

Figure 2.1. SF_6 molecule

The d orbitals of the M shells are saturated by 10 electrons. SF_6 has a tendency to capture other electrons required to fill these orbitals and because of this attaching capability is used for quenching arcs.

The electronic structure of sulphur in the ground state is $1s^2 2s^2 2p^6 3s^2 3p^2 3p^1 3p^1$. Promotion of an s and a p electron to d orbitals gives the structure $1s^2 2s^2\ 2p^6 3s^1 3p^1 3p^1 3d^1 3d^1$. The one 3s, three 3p, and two 3d orbitals hybridise to form six hybridised sp^3d^2 orbitals, Each orbital points to the corner of an octahedron, and is available for electron-pair sharing with a fluorine atom.

The physical constants of SF_6 are:

Molecular weight, 146.06.

Dissociation energy, 3.9 eV for the S-F bond (Lifshitz *et al.*, 1980).

Melting point, -50.8 °C (Schumb, 1947).

Sublimation point, -63.7 °C (Schumb, 1947).

Critical temperature, 45.55 °C (Miller *et al.*, 1951).

Critical pressure, 3.73 MPa (Miller *et al.*, 1951).

The velocity of sound at atmospheric pressure is 133 ms^{-1} at low frequencies and 147 ms^{-1} at high frequencies (Kaye and Laby, 1973).

Dielectric strength (relative to N_2 =1) at 60 Hz - 1.2 MHz; 2.3 - 2.5 (Eibeck and Mears, 1980).

Dielectric constant at 25 °C and 1 atm, 1.002049 (Eibeck and Mears, 1980).

Refractive index at 632.99 nm, 25 °C and 1 atm, 1.00070296; at 1300 nm, 25 °C and 1 atm, 1.000694 (this work, see chapter 4).

2.2. Manufacturing

Sulphur hexafluoride is produced most efficiently by the reaction between molten sulphur and gaseous fluorine at around 300 °C, with the fluorine for the reaction being

supplied by electrolysis of a solution of potassium difluoride in hydrofluoric acid. The sulphur hexafluoride then has to be purified.

2.3. Applications

High voltage insulation

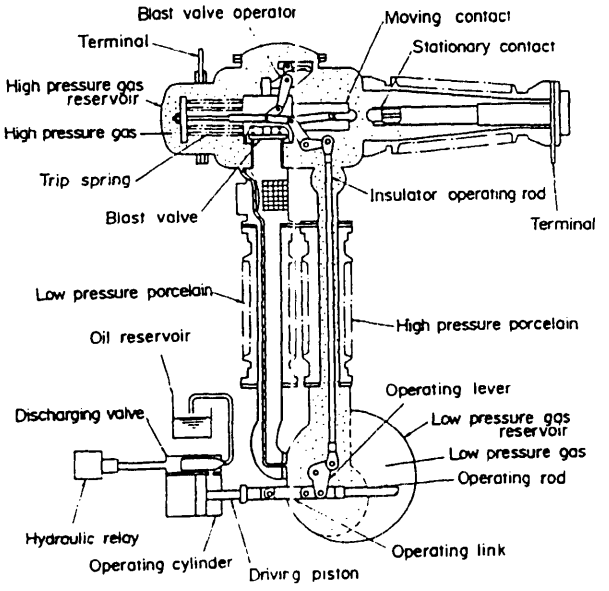

Figure 2.2. A cross section of the circuit breaker filled with SF_6 (type 70-SF-500 GCB. The pressure in the high pressure section is 15 atm and in the low pressure section, 3 atm (Yamauchi *et al.*, 1985)

Ratings:	voltage	84 kV
	normal current	1200 A
	breaking capacity	5000 MVA
	break time	5 cycles

The main practical use of SF_6 is in high voltage switchgear. SF_6 is used in circuit-breakers for switching voltages between 30 kV and 800 kV, and currents up to a few thousand amperes. SF_6 has high dielectric strength, more than double that of air or CO_2, and because of its electronegative nature, it has excellent arc-quenching properties. Although SF_6 dissociates during the arc that occurs on switching, self-healing takes place following the arc, as the dissociation products recombine. This is the ideal situation, but in reality, a small amount of SF_6 is lost during each switching process. Indeed, this loss of SF_6 occurs during any electrical discharge; an arc, a glow or a corona.

Circuit breakers which use oil or gas as their dielectric medium are now being replaced by SF_6- filled circuit breakers. The latter can operate at higher voltages than those that use oil or air, so that in order to switch a particular voltage, fewer SF_6 circuit breakers are needed in series. Furthermore, SF_6 circuit breakers have fewer parts and hence lower failure rates.

In general, two types of SF_6 circuit breaker are used: the gas-blast breaker shown in figure 2.2 and the puffer breaker shown in figure 2.4. The former uses higher pressures and so can operate at higher voltages. However, because the SF_6 puffer circuit breaker is cheaper and less complicated, it is often cost effective to use a few such units in series rather than a single gas-blast unit.

Figure 2.3 illustrates the operation of an SF_6 puffer circuit breaker. Four stages in the breaking process are depicted. In the closed position the electrodes are in contact to form the conducting path. In the compression stage, movement of the puffer cylinder compresses the gas while the electrodes remain in contact. At the moment of separation of the electrodes, an arc is formed but the compressed gas rapidly extinguishes the arc. In the open position with the arc extinguished, the circuit is broken.

Underground transmission lines, now being used in Europe, Japan and the United States for electricity transmission up to 1100 kV are filled with high pressure SF_6 because of its excellent insulating characteristics.

Linear accelerators and Van de Graaff generators can be designed for very high voltages if they are filled with SF_6 .

Silicon-wafer etching

While it is very inert and easy to handle under normal conditions, SF_6 is an excellent source of fluorine atoms in an RF plasma discharge. The fluorine atoms readily react with a silicon wafer through the process

$$Si + 4F \rightarrow SiF_4$$

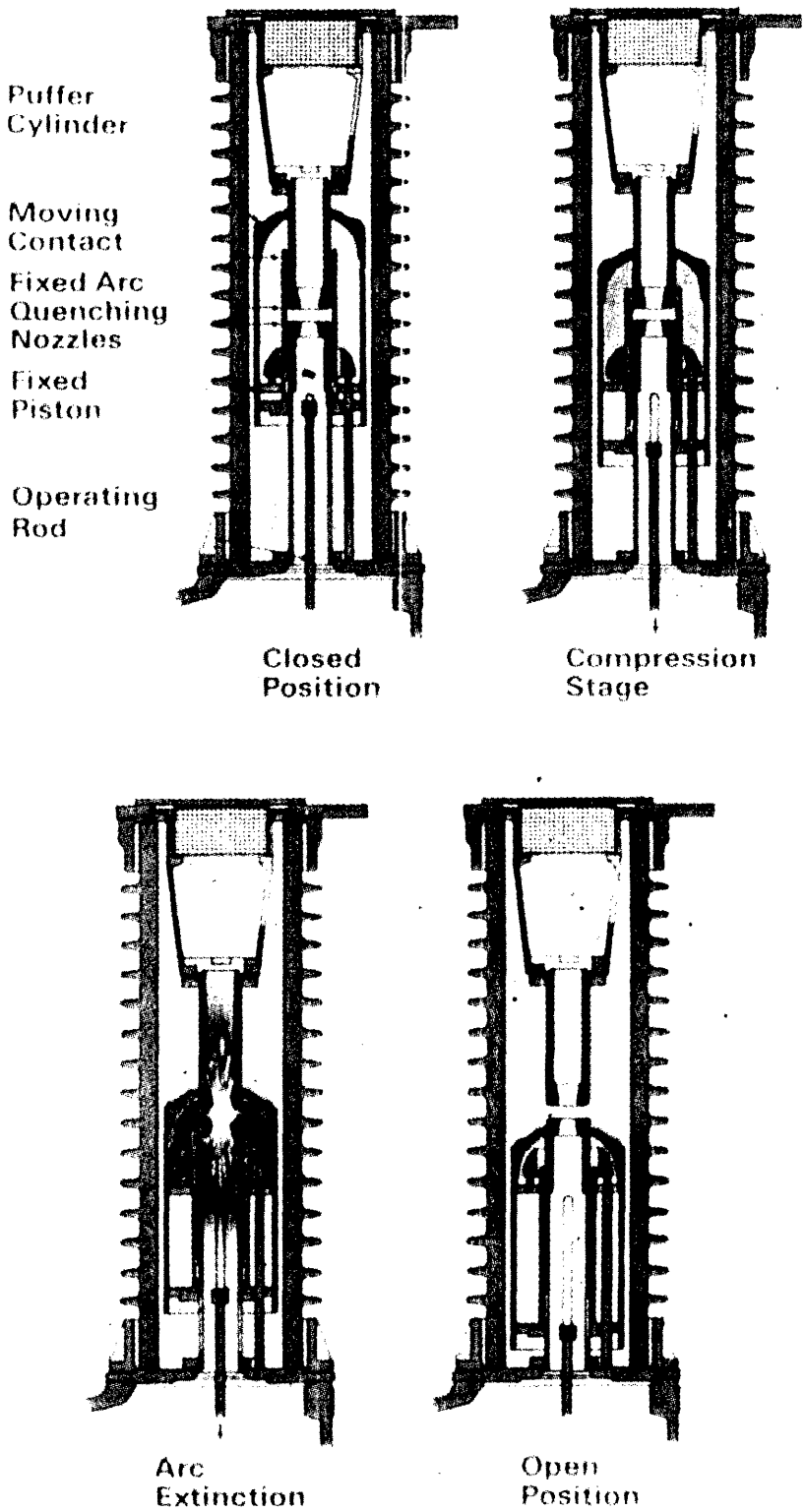

Figure 2.3 Operation cycle of SF_6 circuit breaker (from Siemens, 1982)

where SiF_4 is a gas. This process is used for etching silicon wafers as one of the steps in the manufacture of semiconductor devices. In the manufacture of semiconductor devices this process is one of the steps used for etching silicon wafers: the etching gas may be either ClF_4 or SF_6.

Transformer insulator and cooling

Transformers filled with SF_6 produce less acoustic noise than those filled with oil and because of that they are used in urban areas and within buildings. SF_6 is safer than oil as it is not flammable. SF_6 - filled transformers also have the advantage of a very low impulse ratio. The impulse ratio of an insulating medium is the ratio of the voltage at breakdown when a short pulse is applied (a fraction of a microsecond) to the peak 50 Hz breakdown voltage applied for 1 minute or longer. In SF_6 the low ratio is probably due to inhibition of the leader discharge by electron attachment when an impulse voltage is applied.

Waveguide transmission

The power transmitted through a waveguide can be greatly increased if the waveguide is filled with SF_6. At 3 GHz it is 10 times that for an air-filled waveguide. For example, the breakdown field for 1 atm SF_6 is 4 times that for dry air at 1 atm, using 0.6 μs pulses (Meek and Craggs, 1978).

Leak detection and gas tracing

SF_6 is an excellent gas for use in leak detection because it has very low viscosity. In addition, there are systems on the market that can detect SF_6 in amounts as low as 0.01 ppb, regardless of background gases (Neimeyer and McCormick, 1968).

The same reason that makes SF_6 appropriate for leak detection, makes it useful for gas-tracing in meteorological studies of air-mass movement (Turk *et al.*, 1968).

Loudspeakers

The velocity of sound in SF_6 is about 3 times lower than that in air. This, together with its low toxicity and resistance to hydrolysis, makes SF_6 a good filling gas for sealed loudspeakers. Compared to a similar sized loudspeaker filled with air, an SF_6 - filled loudspeaker has a cut-off frequency which is 1.24 times lower. This provides a significant improvement in bass response.

Magnesium casting

Magnesium alloys used for die casting burn in air at temperatures above 600 °C. To prevent this, the whole process is carried out in a protective atmosphere such as air or CO_2 mixed with 0.22 vol % of SF_6, susequently reducing slag (Kirk-Othmer Encyc. Chem. Tech. 1980; Fruehling and Hanawalt, 1969).

Manufacture of fluoride glasses

A small amount of SF_6 (15%) is used in the production of high quality heavy metal fluoride glasses (Sanghera and Aggarwal, 1993) that can be used for optical fibres.

2.4. Switchgear

As described earlier, the main use of SF_6 is as an insulating medium in switchgear. This important application of SF_6 will now be discussed in detail, since it is particularly relevant to the work of this thesis

Switchgear is a general term used for circuit-breakers, interrupters, control switches and so on. The differences between them are in their rated characteristics (current, interrupting current, interrupting voltage, frequency of switching, etc.) The essential role of each is to open and close an electric circuit. When it opens a circuit, the unit must be an ideal insulator, and when it closes a circuit, it must then be an ideal conductor. At the same time, the action of closing or opening has to be rapid, without creating over-voltages and the unit

should be able to perform these operations several thousand times without failure. This means that contacts should not be damaged at opening or closing. These are demanding criteria, considering that interrupted currents can be higher than 100 kA and voltages are up to 1000 kV.

During the opening of the contacts of a switchgear unit, an arc plasma is developed between the contacts. Even in a domestic light switch an arc occurs when it is switched off. Although it may appear that the development of a plasma should be avoided, a switchgear unit actually relies on plasma production because it is the plasma that absorbs the energy stored in the circuit (network), that is, in the magnetic field. The stored energy is given by $\frac{Li^2}{2}$ where L is the circuit inductance and i is the current flowing through the circuit. When the contacts of the switchgear unit open, an over-voltage is produced according to the relation

$$V = L\frac{di}{dt}.$$

If the circuit is opened too quickly, the over-voltage can be very high because $\frac{di}{dt} \to -\infty$. The fault currents that are interrupted by circuit breakers are of the order of 100 kA and the over-voltage could destroy the equipment. Fortunately, the arc that develops between contacts at opening absorbs the inductive energy.

Let us consider first the operation of a basic vacuum circuit breaker in a DC circuit. When the contacts move apart, there is a moment when only a small area of one of the contacts touches the other. The resistance, R, of this contact point is high and the heat dissipation at the point is very high, given by Ri^2. The heat produced in that spot melts a small amount of contact metal, and the evaporated metal atoms are ionised to produce an arc plasma. This arc continues to conduct the current and absorb the stored energy. The energy is lost by radiation and by further heating and evaporation of contacts. As the contacts move further apart, the heat continues to be dissipated, the electric field becomes weaker and the ionised atoms and electrons diffuse to the walls. The magnetic field (B) of the current (J) through the plasma creates J x B forces which cause the arc to strike the circuit-breaker wall

and thus lose energy. These effects lead to the extinction of the arc and opening of the circuit. This occurs when the contacts are in a vacuum. When a gas surrounds the contacts, the arc energy, created during the first moments of opening, is absorbed by the gas and the gas becomes ionised. Further ionisation occurs within the plasma and conduction of the current is maintained. Apart from losing energy through radiation, the inductive energy is used for further ionisation of the gas. For effective DC switching the gas in the circuit breaker should have good thermal conductivity and high ionisation energy (Rieder, 1970). The arc usually extinguishes faster in a gas-filled circuit breaker than in a vacuum unit.

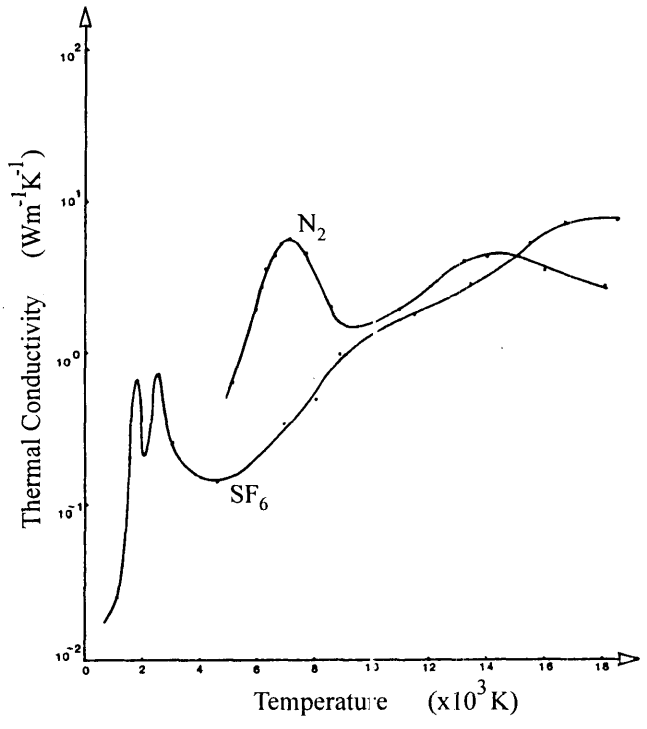

Figure 2.4. Thermal conductivities of SF_6 (Frost and Liebermann, 1971) and N_2 (Capitelli and Devoto, 1973) as a function of the temperature of the gas.

Switchgear for alternating current (AC) are based on the fact that the current goes to zero every 10 ms (8.3 ms in USA and some parts Japan). An arc is developed in the same way as for a DC current, but as the current approaches zero, the arc intensity decreases. The arc extinguishes when the current goes to zero. Ideally, when the voltage increases again,

the contacts are far enough apart that another arc is not initiated. In practice with short contact separation, residual ionisation causes the arc to re-ignite and it usually takes a few cycles for an arc to be extinguished.

Important features of the gas filling are the dependence of thermal and electrical conductivity on the temperature of the gas, which is in the plasma state. Figure 2.4 shows the variation of the thermal conductivities of SF_6 and N_2 with plasma temperature, at one atmosphere.

The ideal medium for an AC circuit breaker would have low ionisation energy and thermal conductivity in the high current stage; that is, at high temperatures (Rieder, 1970). Thus, the plasma electrons conduct the current and the energy of the arc is absorbed weakly by the plasma. If the ionisation energy in the high current stage is high the energy of the arc is absorbed quickly and the arc may extinguish before the current reaches zero. This would cause an over-voltage which would produce a new arc. When the current approaches zero, the temperature of the plasma decreases. At this time, the thermal conductivity should be relatively high so that the arc energy is dissipated quickly, and this is the case for SF_6 at temperatures between 2000 K and 4000 K (figure 2.4). Hence, when the current passes through zero the arc is extinguished. When the voltage increases again the distance between contacts is large enough to prevent re-ignition of the arc. The distance necessary to prevent re-ignition of an arc depends on the pressure and dielectric strength of the filling gas.

SF_6 has a higher dielectric strength than most other gases, so this distance is smaller than for other gases at a particular pressure. As a result, circuit breakers filled with SF_6 are mechanically simpler than others.

SF_6 is now generally used for high voltage switchgear, but older systems and some lower voltage units use other media such as air ($N_2 + O_2$), oil and vacuum. In oil the arc generates hydrogen from hydrocarbons and hydrogen acts as the quenching medium.

All switchgear media gradually degrade and have to be replaced from time to time. SF_6 has a relatively long life time due to reassociation of SF_6 molecules following arc quenching. Nevertheless, some loss of SF_6 molecules does occur, both during switching and as a result of unwanted corona discharges, and due to leakage.

2.5. Electrical discharges

The main application of SF_6 is in high-voltage devices because of its excellent insulation and dielectric properties. However, SF_6 suffers degradation in these devices due to corona and glow discharges, sparks and arcs. In the experiments described in this thesis, SF_6 dissociation was investigated in glow and corona discharges. In this section, the fundamental nature and behaviour of glows and coronas are described.

Gases are normally good insulators. Their electrical conductivities depend on pressure and temperature, but under normal conditions (25 °C and 1 atm) they are of the order of 10^{-12} Ω^{-1} m^{-1} (Rieder, 1970). Following electrical breakdown, a gas may be transformed to a plasma state with electrical conductivity increased by many orders of magnitude, and the gas becomes a good conductor. The voltage required for breakdown of a gas (not exposed to radiation and high temperature) depends on the nature of gas, the neutral gas number density N, the nature of the applied voltage (AC, DC, or pulsed), electrode materials, the electrode surface conditions and the electric field produced by the applied voltage. Depending on these parameters, a spark, arc, glow or corona can occur.

2.5.1. Attaching and non-attaching gases

According to their behaviour in a discharge, gases can be divided into non-attaching or electropositive, and attaching or electronegative. Gases such as He, Ne, Kr, Xe, N_2 and NH_3 are electropositive. O_2, CO_2, NO_2, CCl_4, $CClF_2$, C_2F_6, the halogens and SF_6 are electronegative.

In a discharge in an electropositive gas, electrons and positive ions conduct the current. Their concentrations throughout most of the volume of the discharge are approximately the same. Discharge regions in which the concentrations of ions and electrons are much greater than their difference are generally referred to as quasineutral (Von Engel, 1965).

In electronegative gas discharges there are three charge carriers in the discharge plasma: electrons, positive and negative ions. In a state of quasineutrality, the

number of positive ions is equal to the sum of negative ions and electrons. However, the number of ions, both positive and negative, is much greater than the number of electrons because electrons are attached to neutral atoms and produce negative ions. Attachment can increase the initial breakdown voltage of the gas (George and Richards, 1969).

2.5.2. DC glow discharge

An excellent review of glow discharges has been provided by Francis (1956). A DC glow discharge is produced when a DC potential above the static breakdown potential is applied between two electrodes in a gas at low pressure. For air, glows occur below 100 Torr. The structure of a typical glow discharge and its potential distribution are depicted in figure 2.5. The cathode is covered with a thin luminous layer called the cathode glow. Sometimes there is a thin dark space, called the Aston dark space, that exists between this glow and the cathode. The cathode glow merges into the cathode dark space, also called the Crookes or Hittorf dark space (Loeb, 1939), which is sharply terminated by the edge of the negative glow that fades into the Faraday dark space. The positive column is between the Faraday dark space and the anode. The narrow region in front of the anode can be brighter than the positive column and is called the anode glow.

The positive column is a region with uniform luminosity. Often it is the largest section of a glow discharge, although a glow discharge can exist without a positive column. Electron production in the positive column at low pressures for non-attaching gases is balanced by ambipolar diffusion. At high pressures, electron-ion recombination becomes a significant loss process, and in attaching gases at all pressures, attachment followed by ion-ion recombination plays an important role. The potential gradient in the positive column is small and the positive column acts essentially as an electrical connection between the important negative discharge regions and the anode. When the distance between the electrodes is reduced, only the length of the positive column decreases, while the lengths of the negative regions remain the same.

The glow discharge is self-sustaining as a result of electron production at the cathode surface by positive-ion bombardment. There is a positive space-charge region in front

of the cathode which provides a strong field between the cathode dark space - negative glow boundary, and the cathode. This accelerates the positive ions and they strike the cathode to produce secondary electrons. The electrons accelerate away from the cathode, and while still near the cathode surface where their energy is relatively low, they excite gas atoms and molecules, as well as atoms of material sputtered from the cathode surface by positive ions, to provide the cathode-glow emission (Wronski *et al.*, 1996). In the cathode dark space their energy is high and they make some ionising collisions with little excitation. In the negative glow, where the electric field falls to zero, they cause ionisation and excitation. The electrons lose much of their energy in the negative glow and in the Faraday dark space little ionisation or excitation occurs. Electrons are accelerated by the weak field of the positive column, causing some excitation and ionisation in the positive column. In front of the anode there is an increase in the electric field due to the existence there of an electron space charge. This produces the anode glow. Sometimes, regular bright and dark striations are created in the positive column, because of the establishment of space-charge layers (Emeleus and Woolsey, 1970).

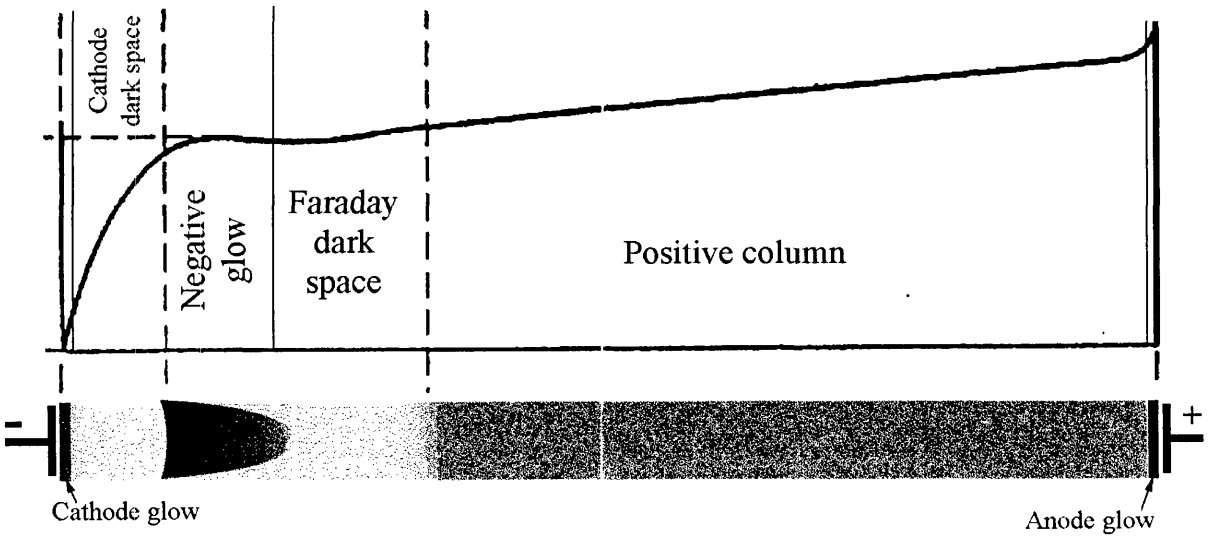

Figure 2.5. Potential distribution between the cathode and anode in a glow discharge.

At low pressures (below 10 Torr for electropositive gases), the cross section of the positive column has the same area as the electrodes. Such a positive column is called diffuse and is controlled by charged-particle diffusion to the wall. Ions and electrons diffuse radially at the same rate and this is called ambipolar diffusion. At higher pressures, the negative regions move towards the cathode and the column may become constricted. (Mouwen and Claassens 1970). There are several effects that can lead to a constricted glow discharge: volume recombination, stepwise ionisation and gas-heating (Hatori and Shioda, 1976). Constriction also depends on the current and appears when the current is high. At high currents the constricted positive column is controlled by three-body recombination (Hatori and Shioda, 1976). At even higher currents a transition to an arc occurs.

2.5.3. Glow discharge in electronegative gases

The glow discharge depicted in figure 2.5 is for an electropositive gas. Glow discharges in electronegative gases have the same regions but their dimensions along the axis are different. The positive column is extended while the cathode glow, cathode dark space and Faraday dark space are shorter and shifted towards the cathode. Often, only a thin dark space exists between the Faraday dark space and the positive column. The boundaries between dark and bright sections are sharper and brighter. Electrons are attached to atoms and molecules in electronegative gases to form negative ions. The negative ions are less mobile than the electrons and negative space charge regions are readily established. This causes the establishment of positive and negative ion space charges and the resultant regions of strong electric field cause narrow bright regions.

At high pressures and high currents a constriction of the positive column may occur. The transition pressures and currents for constriction are lower for electronegative gases than for electropositive gases. Ogle and Woolsey (1987) describe constriction in an SF_6 glow discharge, in terms of a radial temperature gradient leading to a radial gradient in E/N (electric field/gas density). The electrons produced on the axis diffuse radially into the outer, lower E/N, regions where attachment occurs, so that electrons, and hence ionisation and excitation are concentrated on the axis.

For the glow discharges described in this thesis, currents were around 10 mA, with the initial pressure of SF_6 being around 1 Torr, and the positive column was constricted.

2.5.4. DC corona or partial discharge

For the generation of a corona, also called a partial discharge, a strong non-uniform electric field must exist around one of the electrodes. That electrode is usually a wire or a point and different corona discharges occur for positive and negative point/wire electrodes. These discharges are called positive coronas and negative coronas, respectively.

2.5.4.1. Positive corona

In a positive corona, electrons are accelerated towards the point anode and they ionise the gas through avalanche multiplication, producing positive ions. The electrons move rapidly to the anode, while the positive ions move away from the anode at much lower speed. As a result, ions accumulate around the anode building a positive charge and reducing the electric field around the anode tip. Finally, the discharge ceases because the field is not strong enough to maintain ionisation. A new discharge occurs when the positive ions have drifted away from the anode. Hence, the positive corona is essentially a series of pulses.

As the point/wire potential is increased, a typical corona may pass through several stages depending on the nature of the gas. For example, the various stages of positive coronas in SF_6 have been investigated by Van Brunt and Leep (1981). As the voltage is increased, low-level electron avalanches of low repetition rate are created and they then develop into avalanches accompanied by large streamer pulses. Further voltage increases creates bursts of pulses. Their amplitude and frequency, and pulse burst duration increase when the applied voltage increases. If the gas pressure is increased, the average duration of a burst of pulses decreases and the time between pulses within a burst decreases.

2.5.4.2. Negative corona

Negative coronas are different for electropositive and electronegative gases (Weissler, 1943).

In electropositive gases, the positive ions created around the point cathode move to the cathode due to the high electric field and collide with the cathode to produce more electrons. The electrons travel towards the anode creating a steady glow around the cathode as a result of excitation within the high field region.

In electronegative gases some of the electrons created around the point cathode produce positive ions while others are captured by the gas molecules to produce negative ions. These negative ions move away slowly from the cathode and a cloud of negative ions builds up around the cathode causing the discharge to extinguish. The discharge starts again when the negative ions have moved away. The negative corona in electronegative gases therefore consists of pulses called Trichel pulses (Meek and Craggs, 1978).

The SF_6 corona experiments in this thesis use positive point - plane electrode geometry at pressures from 90 kPa to 200 kPa and currents of up to 102 μA. SF_6 is an electronegative gas and the resultant positive coronas are of the burst-pulse glow-type reported by Van Brunt and Leep (1981) and Macgregor *et al.* (1986).

Chapter 3

Experimental discharge systems

3.1. Glow discharge system

The cross-section of the low pressure SF_6 glow discharge chamber is shown in figure 3.1. The chamber is 16 cm high with an internal diameter of 17 cm. The internal volume is 3.6 litres. Two identical electrodes are made of stainless steel. Each has a diameter of 25.4 mm and a thickness of 5 mm, and has rounded edges. Their vertical position is variable but the distance between them was maintained at 3 cm for this work. The electrodes are supported on stainless steel rods. Both electrodes are electrically insulated from the chamber, so that their polarity can be changed. In this work, the upper electrode is held positive. The upper electrode is separated from the top plate of the chamber by a teflon® (polytetrafluoroethylene or PTFE) spacer. The lower electrode is isolated from the chamber with teflon insulators, and inside the chamber the cathode support rod is covered with an alumina tube. The cathode is connected to the negative pole of the power supply via a moving-coil ammeter. The chamber is grounded. High voltage feedthroughs (Vacuum Generators) are used to support the anode and cathode.

For the evanescent-wave absorption experiment the quartz window on the side of the glow discharge chamber is replaced by a side arm connected to the system using a "Conflat" gasket and 7 cm non-oxygenated copper seal. Connected to the end of this arm and normal to it, there is a 25 cm long cylinder with the silver halide optical fibre placed along its length. This stainless steel cylinder contains a concentric teflon cylinder so that the fibre cannot touch the metal wall. If a silver halide fibre touches metal it causes corrosion and the fibre becomes "dissolved".

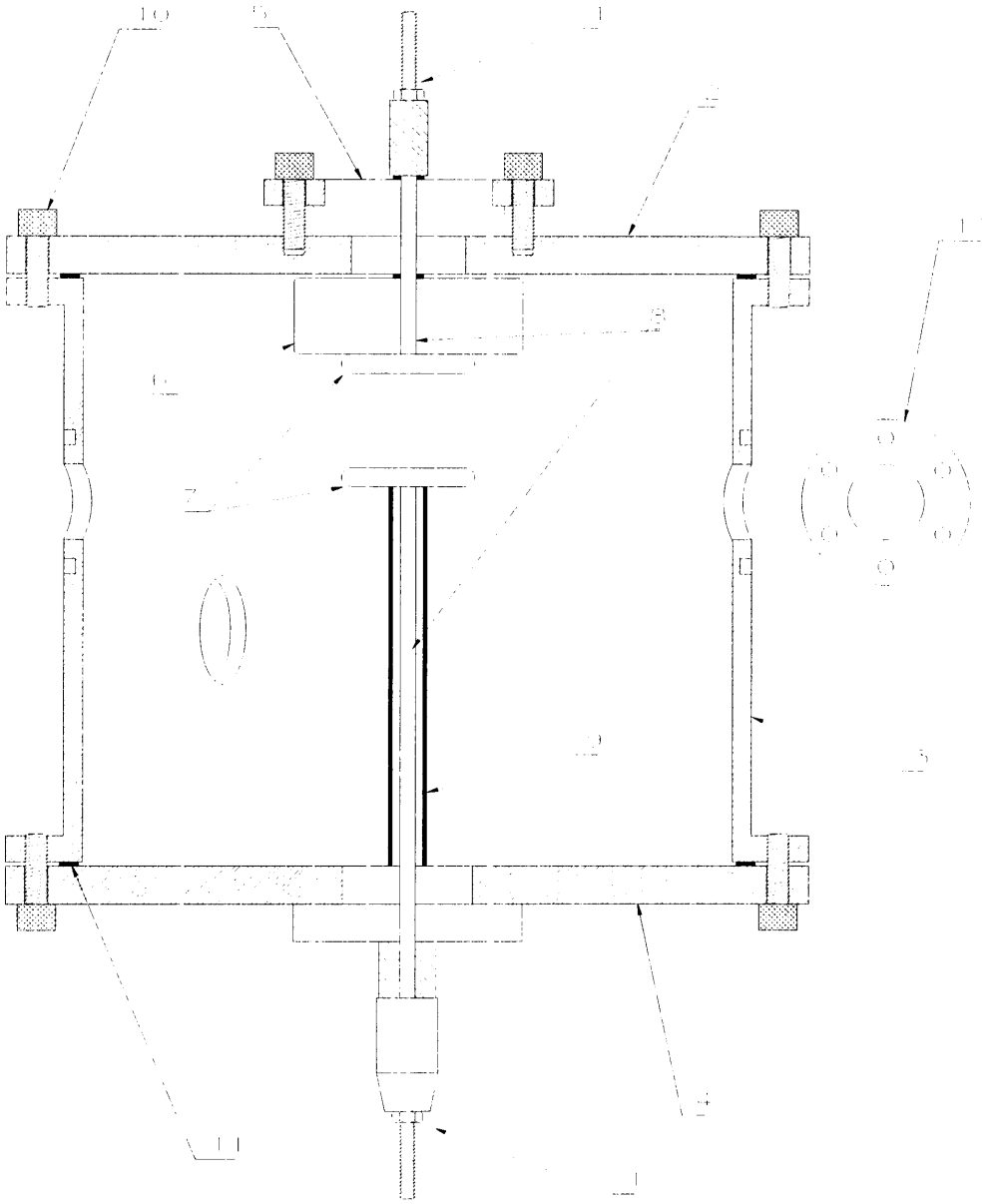

Figure 3.1. Glow discharge chamber

1 - High voltage feedthrough
2 - Top plate
3 - Chamber wall
4 - Bottom plate
5 - Ceramic seal
6 - Teflon® space insulator
7 - Stainless steel electrodes
8 - Electrode stems
9 - Alumina insulation ferrule
10 - Nuts
11 - Soldering tin for sealing the top and bottom plates
12 - 'Conflat' ports

The vacuum system shown in figure 3.2 is divided into low vacuum and ultra-high vacuum systems. There are two connections to the low vacuum rotary pump. One is

used for fast pumping and the second one for extracting gas samples from the chamber into a sample cylinder. The sample cylinder has NaCl windows so that the gas content of the cylinder can be analysed using an infrared spectrometer. With this low vacuum system it is possible to produce a base pressure of 10^{-3} Torr. Then the high-volume stop valves (Vacuum Generators CR38) in front of the turbo-molecular pump and ionisation gauge (3 and 4 in figure 3.2) are opened and the system is evacuated via the high vacuum system. In this way the system is evacuated during baking and purging. During a discharge the stop valve (3) in front of the ionisation gauge is closed.

The high vacuum section is linked to the chamber by a "Conflat" flange interface, using a standard 70 mm non-oxygenated copper seal. Solid soldering wire is used to seal the top lid and allows a base pressure of 5×10^{-7} Torr to be achieved. A similar seal is used for the bottom plate. The pressure in the chamber is measured with a "Baratron" pressure gauge with resolution of 0.04 Torr and 10 Torr maximum reading. The "Baratron" pressure gauge is used to measure the gas pressure during the glow discharge. An Edwards Pirani vacuum gauge is attached at one of the interfaces: its maximum resolution and the maximum reading are 10^{-4} Torr and 0.5 Torr, respectively. For the evanescent-wave absorption experiment this pressure gauge is replaced by a VAISALA barometer with a resolution of 20 Pa in the range from 60 kPa to 110 kPa. A 5 cm diameter quartz window is placed on the side of the chamber for visual monitoring of the glow discharge and optical fibre. An o-ring is used to seal the window. There are two other apertures on the sides of the chamber at the same level and opposite to each other. They are used for input and output of an optical fibre for sulphur deposition experiments. Otherwise these apertures are blocked. All optical fibres are held in place using disposable 6 mm-diameter brass cylinders filled with Torr Seal® adhesive. The cylinders themselves are sealed to the system using o-rings.

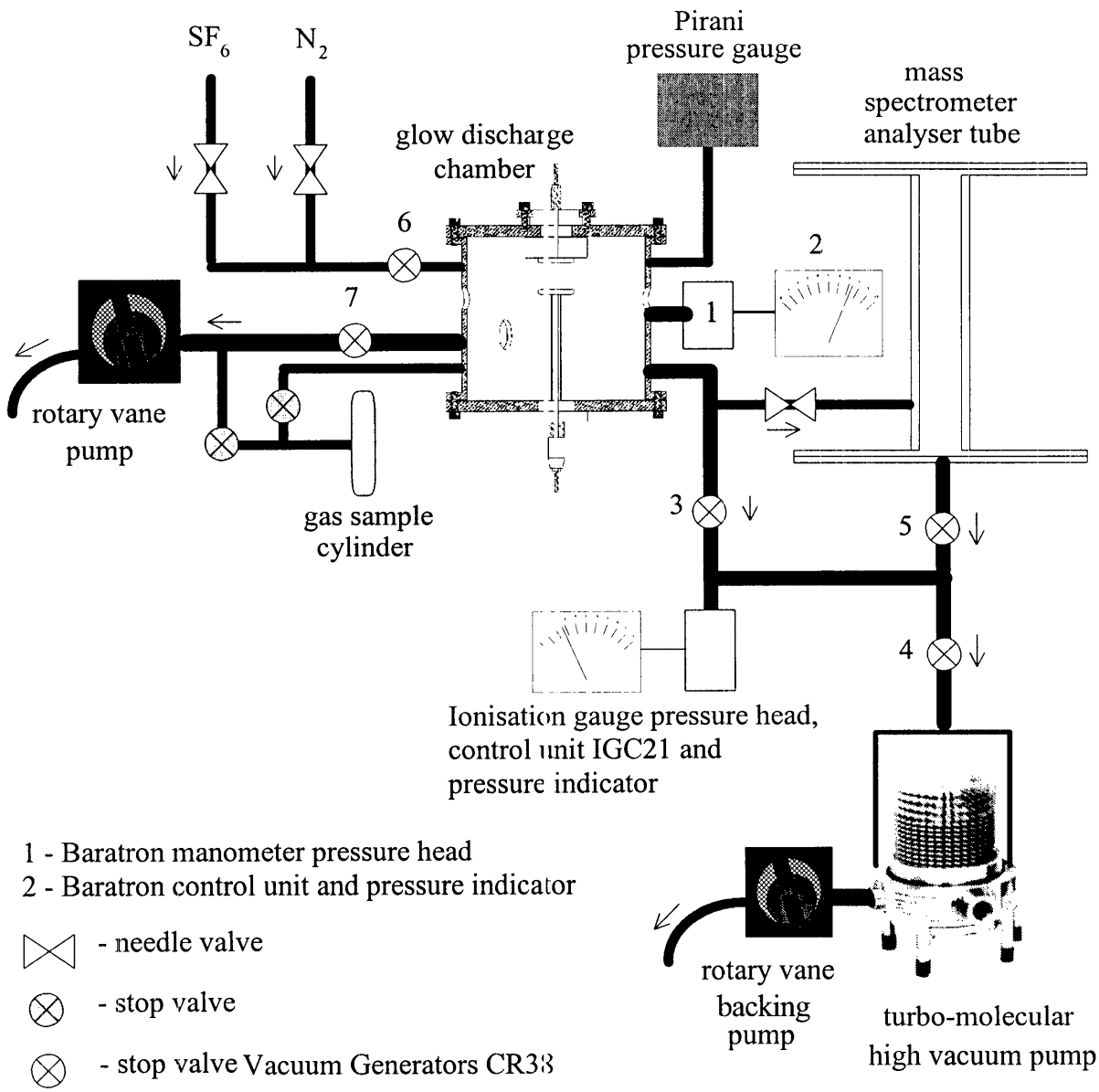

Figure 3.2. Vacuum system associated with the glow discharge chamber

The pressure of the high vacuum is measured using a Vacuum Generators ionisation-gauge head and IGC21 control unit. Its range is from 10^{-3} mbar to 10^{-11} mbar. As mentioned earlier, there is a valve (3) between the chamber and the ionisation pressure gauge. It is open during purging or baking along with the turbo-molecular pump valve (4). During a

discharge, valve (3) is closed and the turbo-molecular pump evacuates the mass spectrometer only; the ionisation gauge then measures the pressure in the mass spectrometer. The turbo-molecular vacuum pump (Balzers Pfeiffer TSU 170) operates in association with a Pfeiffer DUO 1.5 rotary vane backing pump. Water cooling for the turbo-molecular pump is provided by a Balzers Pfeiffer TZK 350 cooling unit. The maximum flow rate of the turbo-molecular pump is 170 l/s for nitrogen and the maximum flow rate of the backing pump is 1.5 m^3/h. With this assembly it is possible to achieve a pressure of 10^{-8} Torr in the mass spectrometer.

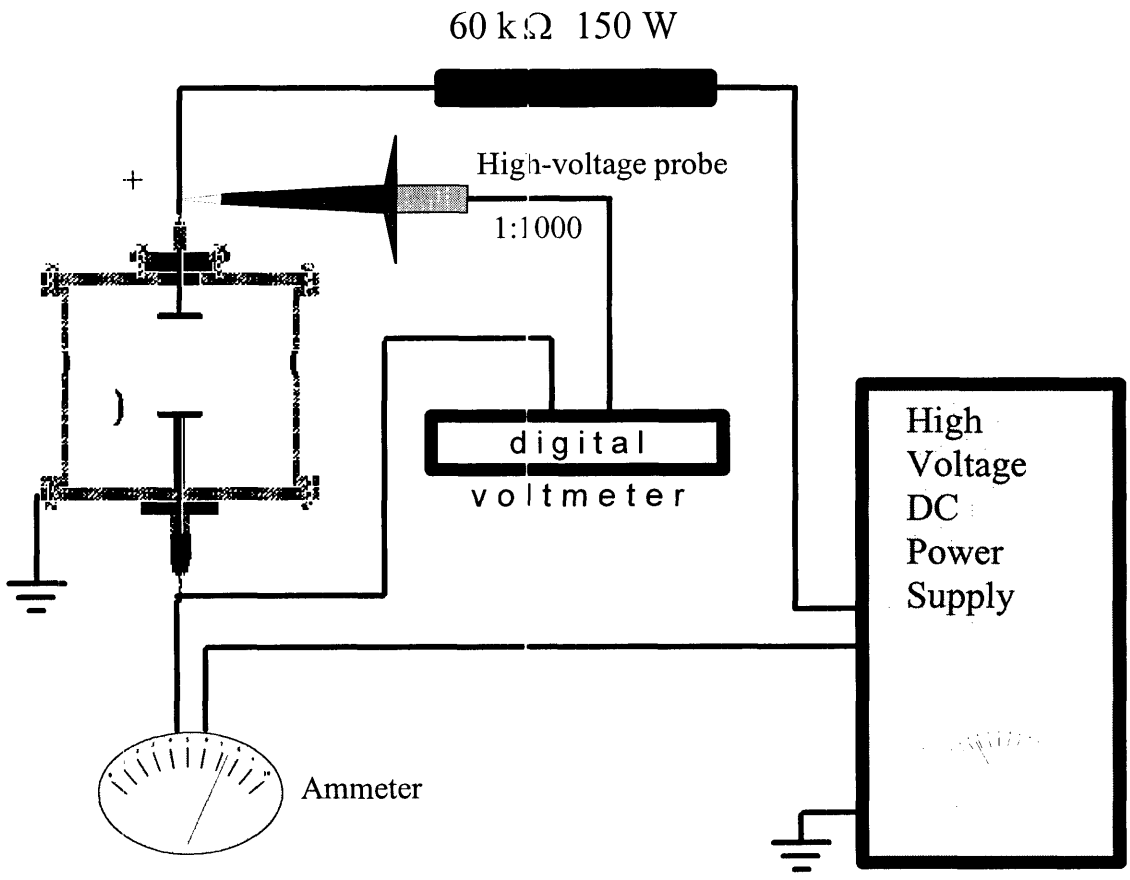

Figure 3.3. Electrical system for glow discharge

The SF_6 and N_2 inlets are through needle valves and the common stop valve (6).

The discharge circuitry used for glow discharges is shown in figure 3.3. The high voltage floating DC power supply source is operated at around 1500 V to provide a 10 mA current in the SF_6 discharge. In order to maintain a constant current of 10 mA, the discharge voltage has to be adjusted slightly from time to time. A 60 kΩ resistor is placed in series between the anode and the power supply. It is a ballast resistor that provides a net positive incremental load to the power supply to control the discharge current, and thus prevents the current "running away" and an arc forming.

3.2. Corona discharge system

The corona discharge chamber is manufactured from an aluminium alloy (type 6351) cylinder of dimensions, 230 mm length and 304 mm diameter. Four flat surfaces are machined on the curved surface of the cylinder, so that the chamber has 1 port on each of these surfaces and 1 port on each of the top and bottom of the cylinder. A cross section of the chamber is shown in figure 3.4. In each of the six sides of the chamber there is an opening of 80 mm in diameter. The top and bottom openings are used to mount electrodes. Three of the side openings are blanked with aluminium plates and one has a quartz window. They are attached to the chamber using 150 mm-diameter aluminium retaining rings. The total inner volume of the chamber, when the electrodes are mounted, is 2.9 litres. The chamber is designed for pressures up to 23 atm, although it has not been tested for these pressures. The maximum pressure used in this work is 2 atm. The maximum discharge voltage used is 50 kV.

The corona chamber is connected to the glow discharge chamber via a needle valve, Granville-Philips model 203, and a 1.5 m long, 6.35 mm diameter stainless steel tube. Hence, the vacuum system connected to the glow discharge chamber is used also for the corona chamber. A Wallace & Tiernan absolute pressure gauge is used to monitor SF_6 pressure in the corona chamber. Its range and resolution are 210 kPa and 1 kPa, respectively.

The bottom plane electrode is a stainless steel disc of 75 mm diameter. The thickness of the disc is 8.5 mm and the edges are rounded. This plate is supported on a 40 mm long, 50 mm diameter nylon cylinder. The assembly is placed on an aluminium blank clamped

to the chamber. The input voltage to the plane electrode is via a BNC connector mounted on the aluminium blank. The centre lead of the BNC connector is connected to the electrode.

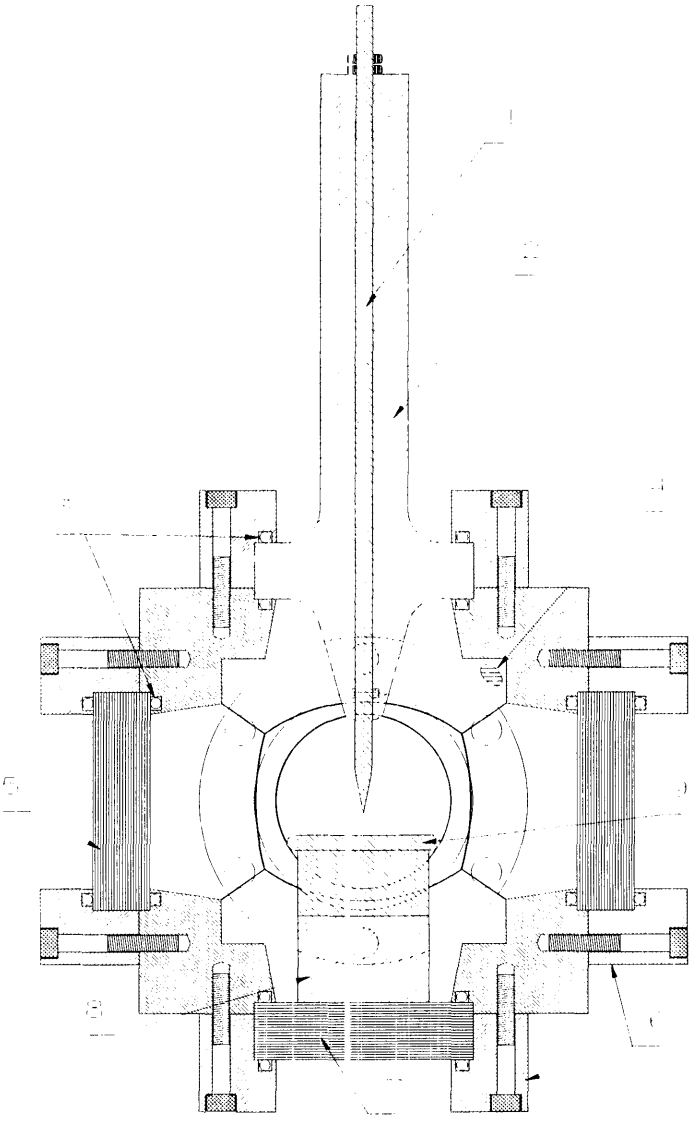

Figure 3.4. Cross - section of the corona discharge chamber

1 - anode feedthrough
2 - high voltage anode insulator
3 - o-rings
4 - vacuum connection
5 - three aluminium plates and one glass window
6 - window/plate clamps
7 - cathode mounting plate
8 - cathode base insulator
9 - cathode

For this work, the bottom electrode is used as cathode and the top electrode is used as anode. Its support rod is of stainless steel. The insulator (2) for the anode support rod is 300 mm long. The bottom section of this insulator is exposed to the discharge environment and is made of teflon, while the top section is of nylon. The discharge electrode itself is a stainless steel tip screwed to the end of the support rod. The tip has an angle of 6°. Vertical movement of the support rod allows the anode position to be varied. On top of the rod, outside the chamber, a large smooth aluminium dome prevents external coronas and sparks. The dome is not shown in figure 3.4.

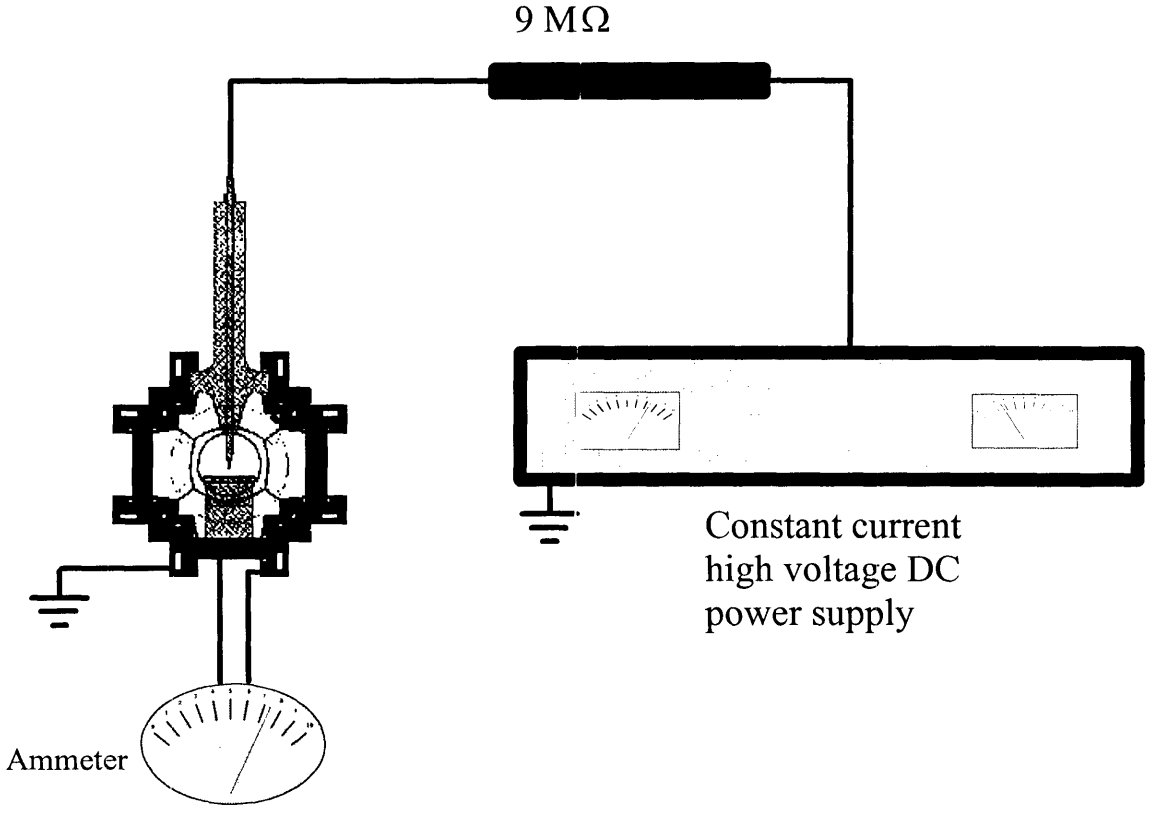

Figure 3.5. Electrical circuit for corona discharges.

The schematic diagram of the circuit for the corona discharge is shown in figure 3.5. The 9 MΩ ballast resistor is included in order to prevent arcing. A ballast resistor

provides a net positive incremental load to the power supply to control the discharge current, and thus prevents the current "running away" and an arc forming.

3.3. Mass spectrometer

Routine monitoring of SF_6 and its discharge by-products is carried out using a mass spectrometer which is a part of the high vacuum system connected to the glow discharge chamber. The mass spectrometer analyser tube shown in figure 3.2 is an A.E.I. MS10 (Associated Electric Industries) single focusing, magnetic-sector spectrometer of medium resolution, having a 180° ion-path deflection of 2" (50.8 mm) radius. The top and bottom flange plates are removable. The bottom plate and gas inlet port are sealed with preformed gold wire gaskets. Due to the need for regular maintenance, tin wire is used for the top flange sealing as it is less expensive than gold wire. Heating bands are fitted around the flanges to allow the analyser tube to be heated to a maximum of 400 °C. As tin is used for the top flange, the voltage for the heater is adjusted so that the temperature of the top flange does not exceed 200 °C. The spectrometer tube is 203 mm high, 149 mm long and 50.8 mm wide, with an internal volume of 0.5 litres. The electron source is a filament wire made of rhenium, with 0.178 mm diameter and 0.5 Ω resistance.

For the operation of the mass spectrometer, a magnet is placed around the analyser tube. Two magnets are available. One of them is a standard "horse-shoe" permanent magnet with a magnetic field induction B of 0.184 Tesla. It is possible to measure ions of 2 to 200 amu using this magnet. Both negative and positive ions can be detected by reversing the magnet. The other magnet is an A.E.I. MS 10 electromagnet controlled by an A.E.I. MS 10 control unit. It is used for positive ions and the mass detection range with this magnet can be extended beyond 400 amu. For the measurements reported in this thesis the magnetic field is set to 0.184 Tesla.

The mass spectrometer analysing tube is controlled using a VSS (Vacuum Scientific Services) RGA 10 control unit. For the work of this thesis it is set to an automatic

scan from 0 to 200 amu; the scan speed to 0.3 amu/s; the electron acceleration voltage to +70 V; the ion repeller voltage to -1 V; and the trap current to 50 μA. The pressure in the analyser tube is between 2×10^{-7} mbar and 10^{-6} mbar while the full-scale deflection of ion current is between 1 and 30 pA. The pressure in the mass spectrometer and the ion-current range were chosen to provide maximum sensitivity.